NOTA: Acest desen nu constituie o obligatie de aplicare de către contractor.
El reprezintă doar un exemplu de circuit de cale utilizat la CFR si nu trebuie aplicat ca atare.

NOTE: It is not compulsory for the contractor to apply this drawing.
It is only an example of track circuit in use at CFR and shall not be applied as such.

D					
C					
B					
A					
Indice Index	Data Date	Modificare Modification/Revision	Proiectant Designer	Aprobat Consultant Approved Consultant	Aprobat CFR Approved CFR

GUVERNUL ROMANIEI
ROMANIAN GOVERNMENT

PROIECT FINANȚAT DE UNIUNEA EURO
EUROPEAN UNION FINANCED PR

CLIENT / CLIENT

C.N.C.F. "C.F.R." - S.A.

ITALFERR
GRUPPO FERROVIE DELLO STATO
Joint Venture leader

Scott Wilson

OBERMEYER
PLANEN + BERATEN GmbH

TECNIC
Consulting Engineers

CONSULTANT / CONSULTANT

			Data Date	Semnătură Signature
Aprobat Approved	Şef proiect Project manager	R. Liuzza	12.12.2011	
Aprobat Approved	Coordonator Secțiune 1 Section 1 Coordinator	C. Gambelli	12.12.2011	
Verificat Checked	Expert Cheie Key Expert	P. Amodio	12.12.2011	

SUBCONTRACTANT / SUBCONTRACTOR AREX

Aprobat Approved	Responsabil Subconsultant Subconsultant Responsible	A. Stanciu - Dinulescu	12.12.2011	
Întocmit Elaborated	Proiectant Designer	ing. Topala Madalin	12.12.2011	

Reabilitarea liniei de cale ferata Brasov - Simeria, parte componentă a coridorului IV Pan European, pentru circulația trenurilor cu viteza maximă de 160 km/h, Tronsonul : Brasov - Sighisoara
Rehabilitation of the railway line Brasov - Simeria, component Part of the IV Pan-European Corridor, for the trains circulation with maximum speed of 160 km/h, Section : Brasov - Sighisoara

Proiect/Project
2004/RO/16/P/PA/003

Faza / Phase:
D.E. / D.D.

Denumire desen / Drawing Title :

Statia / RACOS
Fise picheti tip pentru circuite de cale
Model boxes for track circuit equipment

Codificare / Codification System	Scara / Scale Fără / No scale	LOT / LOT	Nr. / No 01 / 49
EA51 01 E 11 BX SE 01 1 2 022 1			

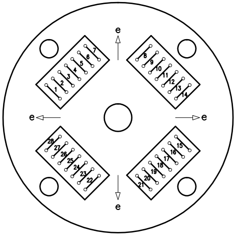
e
e
e
e
1
2
3
4
5
6
7
8
9
10
11
12
13
14
15
16
17
18
19
20
21
22
23
24
25
26
27
28

C4—28
DM1,DM5,DM7,DM9,DM2,DM6,DR1,DR2,DA1,DA3,DA2,DA4,DS11,DS14

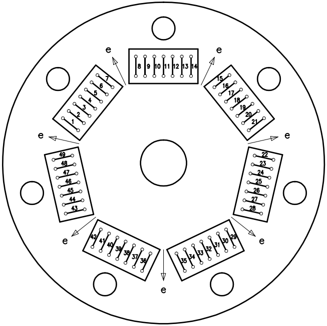
e
e
e
e
e
e
e
1
2
3
4
5
6
7
8
9
10
11
12
13
14
15
16
17
18
19
20
21
22
23
24
25
26
27
28
29
30
31
32
33
34
35
36
37
38
39
40
41
42
43
44
45
46
47
48
49

C7—49
DM3,DM4,DR3,DR4,DS1,DS3,DS5,DS7,DS9,DS13,DS2,DS4,DS6,DS8,DS10,DS12
CUTII DE DISTRIBUTIE

Statia: Racos **EA51 01 E 11 BX SE 011 2 022 1** **2/49**

Tabel cu valorile condensatoarelor C1, C2 la capetele de emisie

Circuitul de cale	Secventa	Tip Circuit	Lungimea circuitului de cale (m)	Valoarea capacitatii (µF)	
				C1	C2
XB−1AD	1	bifilar	1400	**3 µF**	**0,47 µF**
XBF−1AD	3	bifilar	1400	**3 µF**	**0,47 µF**
013 C	1	bifilar	272	**1 µF**	**0,47 µF**
023 C	2	bifilar	310	**1 µF**	**0,47 µF**
033 C	3	bifilar	471	**1 µF**	**0,47 µF**
043 C	1	bifilar	475	**1 µF**	**0,47 µF**
1 Si	3	bifilar	277	**1 µF**	**0,47 µF**
3−5 Si	1	bifilar	419	**1 µF**	**0,47 µF**
7−21 Si	3	bifilar	450	**1 µF**	**0,47 µF**
9−15 Si	2	bifilar	482	**1 µF**	**0,47 µF**
13−17 Si	3	monofilar	215	**1 µF**	**0,47 µF**
19 Si	2	bifilar	384	**1 µF**	**0,47 µF**
015 C	1	bifilar	243	**1 µF**	**0,47 µF**
025 C	3	bifilar	408	**1 µF**	**0,47 µF**
23 Si	1	bifilar	189	**0,47 µF**	**0,47 µF**
25−29 Si	2	bifilar	969	**2 µF**	**0,47 µF**
31 Si	2	bifilar	92	**0,47 µF**	**0,47 µF**
33−35 Si	2	bifilar	273	**1 µF**	**0,47 µF**
37−39 Si	3	bifilar	154	**0,47 µF**	**0,47 µF**
1A C	2	bifilar	379	**1 µF**	**0,47 µF**
1B C	2	bifilar	250	**1 µF**	**0,47 µF**
002 C	3	bifilar	251	**1 µF**	**0,47 µF**
2 C	1	bifilar	775	**2 µF**	**0,47 µF**
III C	2	bifilar	1030	**2 µF**	**0,47 µF**
IV C	1	bifilar	1030	**2 µF**	**0,47 µF**
5 C	4	bifilar	776	**2 µF**	**0,47 µF**
6 C	3	bifilar	640	**2 µF**	**0,47 µF**
7 C	4	bifilar	641	**2 µF**	**0,47 µF**
30−32 Si	2	bifilar	404	**1 µF**	**0,47 µF**
26−28 Si	3	bifilar	273	**1 µF**	**0,47 µF**
20−24 Si	4	bifilar	969	**2 µF**	**0,47 µF**
10−14 Si	4	bifilar	484	**1 µF**	**0,47 µF**
8−16 Si	2	bifilar	450	**1 µF**	**0,47 µF**
4−6 Si	3	bifilar	203	**0,47 µF**	**0,47 µF**
2 Si	2	bifilar	101	**0,47 µF**	**0,47 µF**
066 C	4	bifilar	627	**2 µF**	**0,47 µF**
056 C	2	bifilar	411	**2 µF**	**0,47 µF**
064 C	3	bifilar	289	**1 µF**	**0,47 µF**
054 C	4	bifilar	327	**1 µF**	**0,47 µF**
044 C	2	bifilar	349	**1 µF**	**0,47 µF**
034 C	3	bifilar	353	**1 µF**	**0,47 µF**
34 Si	4	bifilar	316	**1 µF**	**0,47 µF**
18 Si	2	bifilar	191	**0,47 µF**	**0,47 µF**
YC−1AD	4	bifilar	1400	**3 µF**	**0,47 µF**
YCF−1AD	2	bifilar	1400	**3 µF**	**0,47 µF**

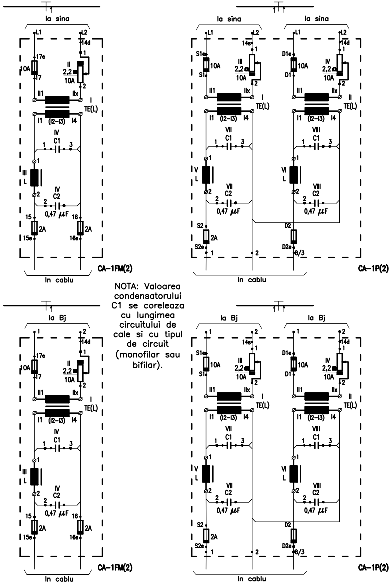
la sina
L1
L2
14d
14s
17e
17
10A
II
III
IV
2,2 Ω
10A
1
2
II1
IIx
I
II
TE(L)
I1
(I2−I3)
I4
IV
VII
VIII
C1
3
III
V
VI
L
C2
0,47 µF
15
16
2A
15e
16e
S1e
S1
D1e
D1
S2
S2e
D2
D2e
8/3
In cablu
CA−1FM(2)
CA−1P(2)
la Bj

NOTA: Valoarea condensatorului C1 se coreleaza cu lungimea circuitului de cale si cu tipul de circuit (monofilar sau bifilar).

Scheme de conectare a aparatajului in cutii de aparataj pentru circuitul de cale

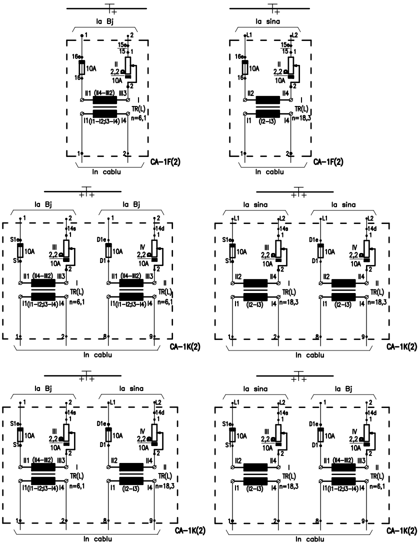
la Bj
la sina
In cablu
CA-1F(2)
CA-1K(2)
TR(L)
n=6,1
n=18,3
10A
2,2
II1 (II4-III2) III3
I1(I1-I2;I3-I4) I4
II2 II4
I1 (I2-I3) I4
S1e S1 D1e D1
14s 14d
15e 15 16e 16
L1 L2

NOTA: La circuitele la care se controleaza ramificatiile, valoarea rezistentei din aparatajul de receptie este de 6 ohmi.

Scheme de conectare a aparatajului in cutii de aparataj pentru circuitul de cale

---

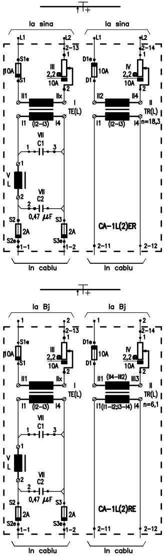
la sina
la Bj
In cablu
CA-1L(2)ER
CA-1L(2)RE
TE(L)
TR(L)
n=18,3
n=6,1
C1
C2
0,47 µF
V
L
VII
2A
10A
2,2
S1e S1 S2 S2e S3 S3e D1e D1
1-1 1-2 2-11 2-12
2-13 2-14

Valoarea condensatorului C1 se coreleaza cu lungimea circuitului de cale si cu tipul de circuit (monofilar sau bifilar).

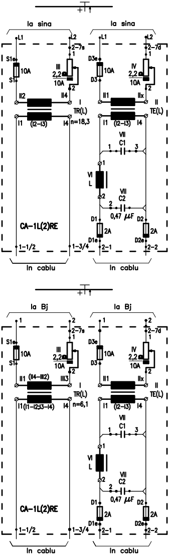
la sina
la Bj
In cablu
CA-1L(2)RE
TR(L)
TE(L)
n=18,3
n=6,1
C1
C2
0,47 µF
VI
L
VII
2A
10A
2,2
S1e S1 D3e D3 D1 D1e D2 D2e
1-1/2 1-3/4 2-1 2-2
2-7s 2-7d

NOTA: La circuitele la care se controleaza ramificatiile, valoarea rezistentei din aparatajul de receptie este de 6 ohmi.

Scheme de conectare a aparatajului in cutii de aparataj pentru circuitul de cale

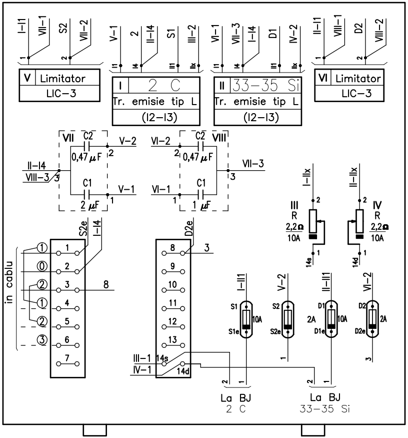
I–I1
VII–1
S2
VII–2
V–1
2
II–I4
S1
III–2
VI–1
VII–3
I–I4
D1
IV–2
II–I1
VIII–1
D2
VIII–2
V Limitator
LIC–3
I 2 C
Tr. emisie tip L
(I2–I3)
II 33–35 Si
Tr. emisie tip L
(I2–I3)
VI Limitator
LIC–3
VII
C2
0,47 μF
V–2
II–I4
VIII–3
C1
2 μF
V–1
VI–2
C2
VIII
0,47 μF
VII–3
VI–1
C1
1 μF
I–IIx
II–IIx
III
R
2,2Ω
10A
IV
R
2,2Ω
10A
14s
14d
S2e
I–I4
D2e
in cablu
①
⓪
②
①
②
③
8
3
I–II1
V–2
II–II1
VI–2
S1
S1e
10A
S2
S2e
D1
D1e
2A
10A
D2
D2e
2A
III–1
IV–1
14s
14d
La BJ
2 C
La BJ
33–35 Si

CA–1P(2)
BIF

2 C; 33–35 Si

CUTIE APARATAJ PENTRU DOUA EMISII

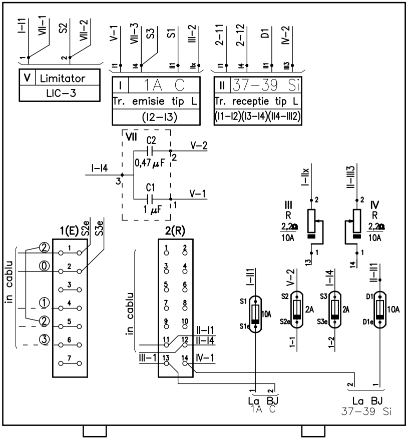
I–I1
VII–1
S2
VII–2
V–1
VII–3
S3
S1
III–2
2–I1
2–I2
D1
IV–2
V Limitator
LIC–3
I 1A C
Tr. emisie tip L
(I2–I3)
II 37–39 Si
Tr. receptie tip L
(I1–I2)(I3–I4)(II4–III2)
VII
C2
0,47 μF
V–2
I–I4
C1
1 μF
V–1
I–IIx
II–III3
III
R
2,2Ω
10A
IV
R
2,2Ω
10A
1(E)
S2e
S3e
2(R)
in cablu
②
⓪
①
②
③
II–I1
II–I4
III–1
IV–1
I–II1
V–2
I–I4
II–II1
S1
S1e
10A
S2
S2e
2A
S3
S3e
2A
D1
D1e
10A
1–1
1–2
La BJ
1A C
La BJ
37–39 Si

CA–1L(2)ER
BIF

1A C; 37–39 Si

CUTIE APARATAJ PENTRU EMISIE–RECEPTIE

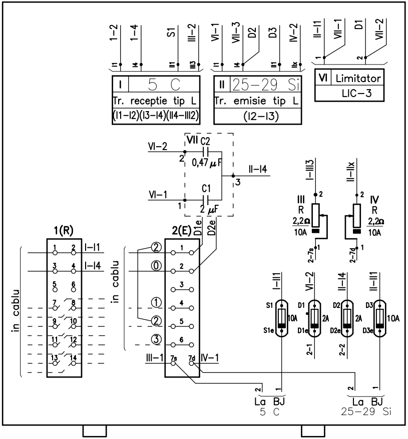
I 5 C
Tr. receptie tip L
(I1–I2)(I3–I4)(II4–III2)
II 25–29 Si
Tr. emisie tip L
(I2–I3)
VI Limitator
LIC–3
VII C2 0,47 μF
C1 2 μF
VI–2
VI–1
II–I4
III R 2,2Ω 10A
IV R 2,2Ω 10A
1(R)
2(E)
in cablu
D1e
D2e
I–I1
I–I4
III–1
IV–1
7s
7d
S1 10A
D1 2A
D2 2A
D3 10A
La BJ
5 C
La BJ
25–29 Si

CA–1L(2)RE

BIF

5 C; 25–29Si

CUTIE APARATAJ PENTRU RECEPTIE–EMISIE

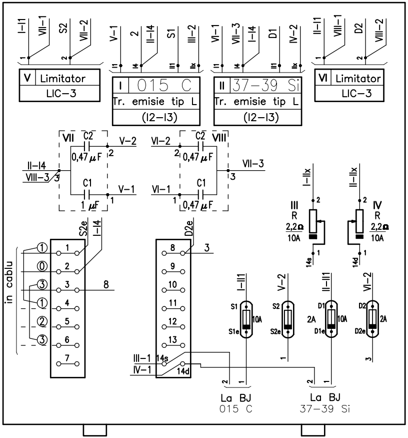
V Limitator
LIC–3
I 015 C
Tr. emisie tip L
(I2–I3)
II 37–39 Si
Tr. emisie tip L
(I2–I3)
VI Limitator
LIC–3
VII C2 0,47 μF
C1 1 μF
VIII C2 0,47 μF
C1 0,47 μF
V–2
V–1
VI–2
VI–1
VII–3
II–I4
VIII–3
III R 2,2Ω 10A
IV R 2,2Ω 10A
in cablu
S2e
I–I4
D2e
III–1
IV–1
14s
14d
S1 10A
S2
D1 10A
D2 2A
La BJ
015 C
La BJ
37–39 Si

CA–1P(2)

BIF

015 C; 37–39 Si

CUTIE APARATAJ PENTRU DOUA EMISII

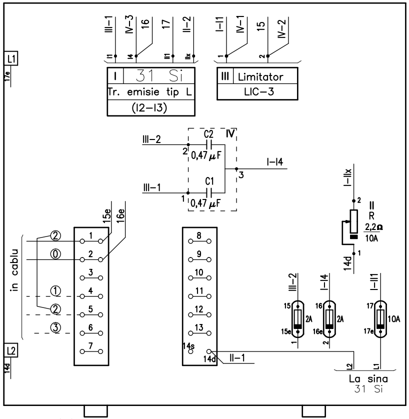

III–1
IV–3
16
17
II–2
I–I1
IV–1
15
IV–2
L1
17e
I 31 Si
Tr. emisie tip L
(I2–I3)
III Limitator
LIC–3
III–2
C2
IV
0,47 μF
I–I4
III–1
C1
0,47 μF
1
2
3
I–IIx
II
R
2,2Ω
10A
14d
15e
16e
in cablu
②
⓪
①
②
③
1
2
3
4
5
6
7
8
9
10
11
12
13
14s
14d
II–1
III–2
I–I4
I–II1
15
2A
15e
16
2A
16e
17
10A
17e
L2
La sina
31 Si

CA–1FM(2)

MONO

31 Si

CUTIE APARATAJ PENTRU O EMISIE

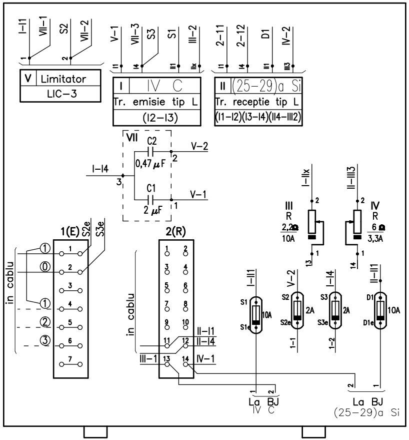

I–I1
VII–1
S2
VII–2
V–1
VII–3
S3
S1
III–2
2–I1
2–I2
D1
IV–2
V Limitator
LIC–3
I IV C
Tr. emisie tip L
(I2–I3)
II (25–29)a Si
Tr. receptie tip L
(I1–I2)(I3–I4)(II4–III2)
VII
C2
0,47 μF
V–2
I–I4
C1
2 μF
V–1
I–IIx
III
R
2,2Ω
10A
II–III3
IV
R
6 Ω
3,3A
1(E)
S2e
S3e
2(R)
in cablu
①
⓪
①
②
③
II–I1
II–I4
III–1
IV–1
I–II1
V–2
I–I4
II–II1
S1
10A
S1e
S2
2A
S2e
S3
2A
S3e
D1
10A
D1e
1–1
1–2
La BJ
IV C
La BJ
(25–29)a Si

CA–1L(2)ER

BIF

IV C; (25–29)a Si

CUTIE APARATAJ PENTRU EMISIE–RECEPTIE

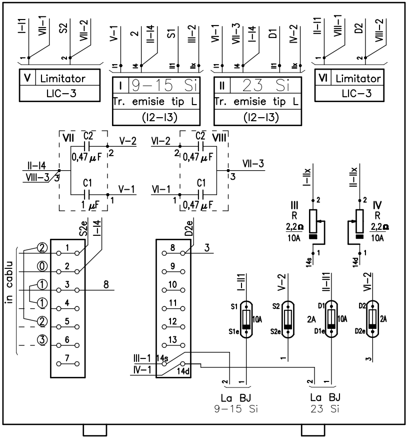
I–I1
VII–1
S2
VII–2
V–1
2
II–I4
S1
III–2
VI–1
VII–3
I–I4
D1
IV–2
II–I1
VIII–1
D2
VIII–2
V Limitator
LIC–3
I 9–15 Si
Tr. emisie tip L
(I2–I3)
II 23 Si
Tr. emisie tip L
(I2–I3)
VI Limitator
LIC–3
VII
C2
0,47 µF
V–2
II–I4
VIII–3
C1
1 µF
V–1
VI–2
C2
VIII
0,47 µF
VII–3
VI–1
C1
0,47 µF
I–IIx
II–IIx
III
R
2,2Ω
10A
IV
R
2,2Ω
10A
14s
14d
S2e
I–I4
D2e
3
in cablu
8
I–II1
V–2
II–II1
VI–2
S1
S1e
10A
S2
S2e
D1
D1e
2A
10A
D2
D2e
2A
III–1
IV–1
14s
14d
La BJ
9–15 Si
La BJ
23 Si

CA–1P(2)
BIF

9–15 Si; 23 Si

CUTIE APARATAJ PENTRU DOUA EMISII

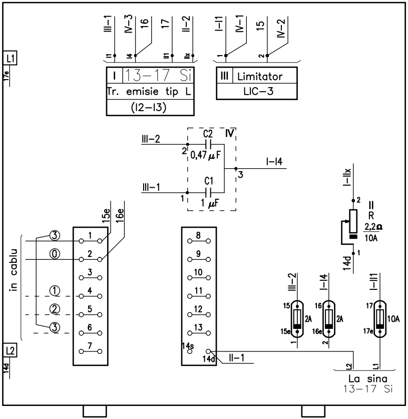
L1
17e
III–1
IV–3
16
17
II–2
I–I1
IV–1
15
IV–2
I 13–17 Si
Tr. emisie tip L
(I2–I3)
III Limitator
LIC–3
III–2
C2
IV
0,47 µF
I–I4
III–1
C1
1 µF
I–IIx
II
R
2,2Ω
10A
14d
15e
16e
in cablu
III–2
I–I4
I–II1
15
15e
2A
16
16e
2A
17
17e
10A
14s
14d
II–1
L2
14d
La sina
13–17 Si

CA–1FM(2)
MONO

13–17 Si

CUTIE APARATAJ PENTRU O EMISIE

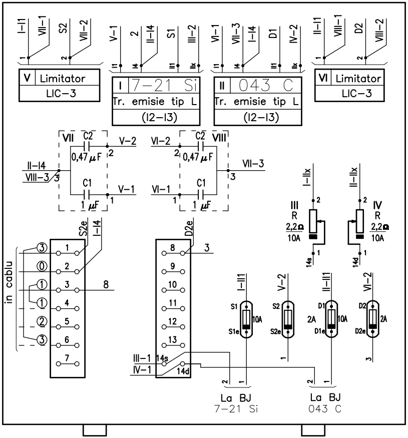
I-I1
VII-1
S2
VII-2
V-1
2
II-I4
S1
III-2
VI-1
VII-3
I-I4
D1
IV-2
II-I1
VIII-1
D2
VIII-2
V Limitator
LIC-3
I 7-21 Si
Tr. emisie tip L
(I2-I3)
II 043 C
Tr. emisie tip L
(I2-I3)
VI Limitator
LIC-3
VII
C2
0,47 µF
C1
1 µF
V-2
V-1
II-I4
VIII-3
VIII
VI-2
VI-1
VII-3
I-IIx
II-IIx
III
R
2,2Ω
10A
IV
R
2,2Ω
10A
14s
14d
S2e
I-I4
D2e
in cablu
③
⓪
①
①
②
③
1
2
3
4
5
6
7
8
9
10
11
12
13
III-1
IV-1
14s
14d
I-II1
V-2
II-II1
VI-2
S1
S1e
10A
S2
S2e
D1
D1e
2A
10A
D2
D2e
2A
La BJ
7-21 Si
La BJ
043 C

CA-1P(2)
BIF

7-21 Si; 043 C

CUTIE APARATAJ PENTRU DOUA EMISII

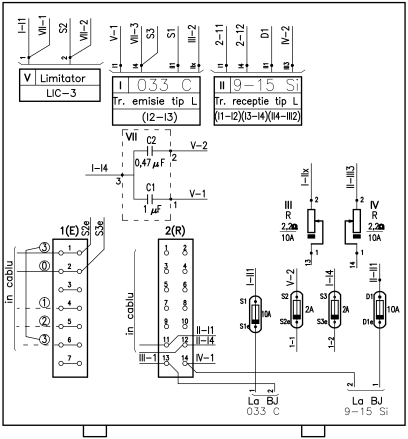
I-I1
VII-1
S2
VII-2
V-1
VII-3
S3
S1
III-2
2-11
2-12
D1
IV-2
V Limitator
LIC-3
I 033 C
Tr. emisie tip L
(I2-I3)
II 9-15 Si
Tr. receptie tip L
(I1-I2)(I3-I4)(II4-III2)
VII
C2
0,47 µF
C1
1 µF
V-2
V-1
I-I4
I-IIx
II-III3
III
R
2,2Ω
10A
IV
R
2,2Ω
10A
13
14
1(E)
S2e
S3e
2(R)
in cablu
in cablu
③
⓪
①
②
③
II-I1
II-I4
III-1
IV-1
I-II1
V-2
I-I4
II-II1
S1
S1e
10A
S2
S2e
2A
S3
S3e
2A
D1
D1e
10A
1-1
1-2
La BJ
033 C
La BJ
9-15 Si

CA-1L(2)ER
BIF

033 C; 9-15 Si

CUTIE APARATAJ PENTRU EMISIE-RECEPTIE

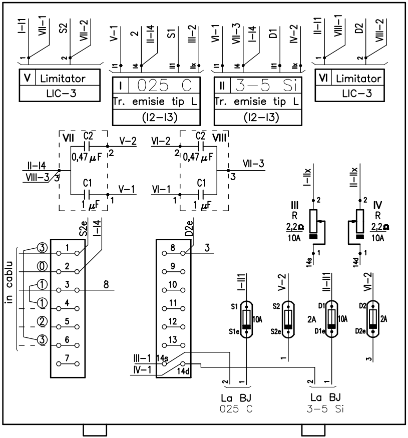
I–I1
VII–1
S2
VII–2
V–1
2
II–I4
S1
III–2
VI–1
VII–3
I–I4
D1
IV–2
II–I1
VIII–1
D2
VIII–2
V Limitator
LIC–3
I 025 C
Tr. emisie tip L
(I2–I3)
II 3–5 Si
Tr. emisie tip L
(I2–I3)
VI Limitator
LIC–3
VII
C2
0,47 µF
V–2
II–I4
VIII–3
C1
1 µF
V–1
VI–2
C2
VIII
0,47 µF
VII–3
VI–1
C1
1 µF
I–IIx
II–IIx
III
R
2,2Ω
10A
IV
R
2,2Ω
10A
14s
14d
S2e
I–I4
D2e
in cablu
③
⓪
①
①
②
③
8
3
I–II1
V–2
II–II1
VI–2
S1
S1e
10A
S2
S2e
2A
D1
D1e
10A
D2
D2e
2A
III–1
IV–1
14s
14d
La BJ
025 C
La BJ
3–5 Si

CA–1P(2)
BIF

025 C; 3–5 Si

CUTIE APARATAJ PENTRU DOUA EMISII

Statia: Racos

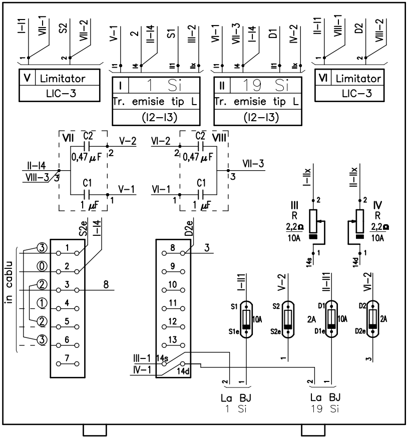
I–I1
VII–1
S2
VII–2
V–1
2
II–I4
S1
III–2
VI–1
VII–3
I–I4
D1
IV–2
II–I1
VIII–1
D2
VIII–2
V Limitator
LIC–3
I 1 Si
Tr. emisie tip L
(I2–I3)
II 19 Si
Tr. emisie tip L
(I2–I3)
VI Limitator
LIC–3
VII
C2
0,47 µF
V–2
II–I4
VIII–3
C1
1 µF
V–1
VI–2
C2
VIII
0,47 µF
VII–3
VI–1
C1
1 µF
I–IIx
II–IIx
III
R
2,2Ω
10A
IV
R
2,2Ω
10A
14s
14d
S2e
I–I4
D2e
in cablu
③
⓪
②
①
②
③
8
3
I–II1
V–2
II–II1
VI–2
S1
S1e
10A
S2
S2e
2A
D1
D1e
10A
D2
D2e
2A
III–1
IV–1
14s
14d
La BJ
1 Si
La BJ
19 Si

CA–1P(2)
BIF

1 Si; 19 Si

CUTIE APARATAJ PENTRU DOUA EMISII

Statia: Racos

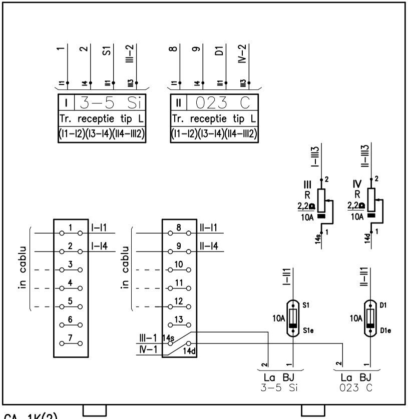
1
2
S1
III–2
I1
I4
II1
III3
8
9
D1
IV–2
I1
I4
II1
III3
I | 3–5 Si
Tr. receptie tip L
(I1–I2)(I3–I4)(II4–III2)
II | 023 C
Tr. receptie tip L
(I1–I2)(I3–I4)(II4–III2)
I–III3
2
III
R
2,2Ω
10A
1
14s
II–III3
2
IV
R
2,2Ω
10A
1
14d
in cablu
1
2
3
4
5
6
7
I–I1
I–I4
in cablu
8
9
10
11
12
13
II–I1
II–I4
III–1
IV–1
14s
14d
I–II1
S1
10A
S1e
II–II1
D1
10A
D1e
2
1
La BJ
3–5 Si
2
1
La BJ
023 C

CA–1K(2)
BIF

3–5 Si; 023 C

CUTIE APARATAJ PENTRU DOUA RECEPTII

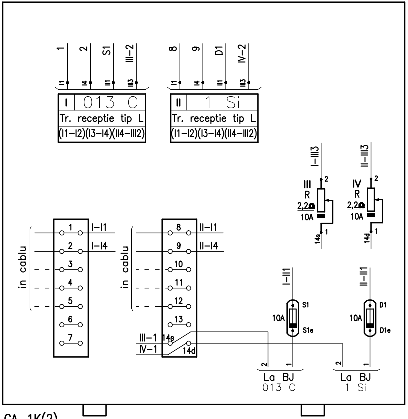
1
2
S1
III–2
I1
I4
II1
III3
8
9
D1
IV–2
I1
I4
II1
III3
I | 013 C
Tr. receptie tip L
(I1–I2)(I3–I4)(II4–III2)
II | 1 Si
Tr. receptie tip L
(I1–I2)(I3–I4)(II4–III2)
I–III3
2
III
R
2,2Ω
10A
1
14s
II–III3
2
IV
R
2,2Ω
10A
1
14d
in cablu
1
2
3
4
5
6
7
I–I1
I–I4
in cablu
8
9
10
11
12
13
II–I1
II–I4
III–1
IV–1
14s
14d
I–II1
S1
10A
S1e
II–II1
D1
10A
D1e
2
1
La BJ
013 C
2
1
La BJ
1 Si

CA–1K(2)
BIF

013 C; 1 Si

CUTIE APARATAJ PENTRU DOUA RECEPTII

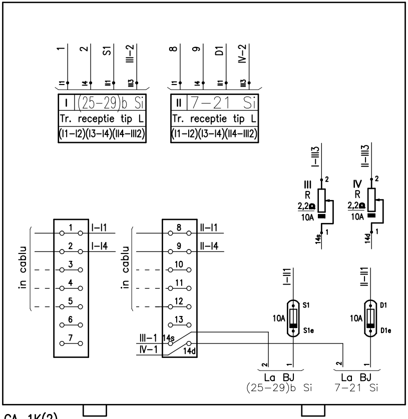
1
2
S1
III–2
8
9
D1
IV–2
I1
I4
II1
III3
I (25–29)b Si
Tr. receptie tip L
(I1–I2)(I3–I4)(II4–III2)
II 7–21 Si
Tr. receptie tip L
(I1–I2)(I3–I4)(II4–III2)
I–III3
II–III3
III
R
2,2Ω
10A
IV
R
2,2Ω
10A
14s
14d
in cablu
in cablu
1 2 3 4 5 6 7
I–I1
I–I4
8 9 10 11 12 13
II–I1
II–I4
III–1
IV–1
14s
14d
I–II1
II–II1
S1
S1e
D1
D1e
10A
10A
La BJ
(25–29)b Si
La BJ
7–21 Si

CA–1K(2)
BIF

(25–29)b Si; 7–21 Si

CUTIE APARATAJ PENTRU DOUA RECEPTII

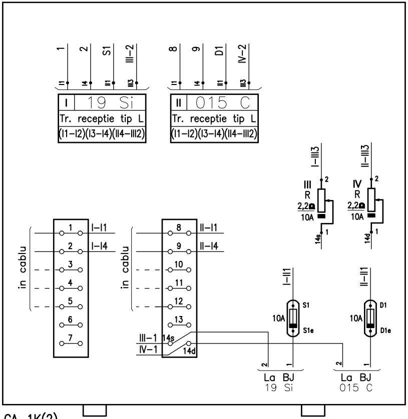
1
2
S1
III–2
8
9
D1
IV–2
I1
I4
II1
III3
I 19 Si
Tr. receptie tip L
(I1–I2)(I3–I4)(II4–III2)
II 015 C
Tr. receptie tip L
(I1–I2)(I3–I4)(II4–III2)
I–III3
II–III3
III
R
2,2Ω
10A
IV
R
2,2Ω
10A
14s
14d
in cablu
in cablu
1 2 3 4 5 6 7
I–I1
I–I4
8 9 10 11 12 13
II–I1
II–I4
III–1
IV–1
14s
14d
I–II1
II–II1
S1
S1e
D1
D1e
10A
10A
La BJ
19 Si
La BJ
015 C

CA–1K(2)
BIF

19 Si; 015 C

CUTIE APARATAJ PENTRU DOUA RECEPTII

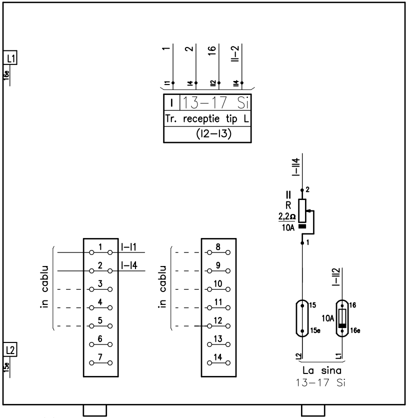
L1
16e
L2
15e
1
2
16
II-2
I1
I4
II2
II4
I
13-17 Si
Tr. receptie tip L
(I2-I3)
I-II4
2
II
R
2,2Ω
10A
1
in cablu
in cablu
1
2
3
4
5
6
7
I-I1
I-I4
8
9
10
11
12
13
14
15
15e
16
16e
10A
I-II2
L2
L1
La sina
13-17 Si

CA-1F(2)
MONO

13-17 Si

CUTIE APARATAJ PENTRU O RECEPTIE

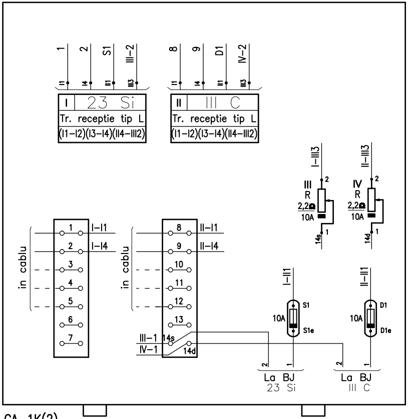
1
2
S1
III-2
8
9
D1
IV-2
I1
I4
II1
III3
I
23 Si
Tr. receptie tip L
(I1-I2)(I3-I4)(II4-III2)
II
III C
Tr. receptie tip L
(I1-I2)(I3-I4)(II4-III2)
I-III3
II-III3
III
R
2,2Ω
10A
IV
R
2,2Ω
10A
14s
14d
in cablu
in cablu
1
2
3
4
5
6
7
I-I1
I-I4
8
9
10
11
12
13
II-I1
II-I4
III-1
IV-1
14s
14d
I-II1
II-II1
S1
S1e
D1
D1e
10A
10A
2
1
La BJ
23 Si
2
1
La BJ
III C

CA-1K(2)
BIF

23 Si; III C

CUTIE APARATAJ PENTRU DOUA RECEPTII

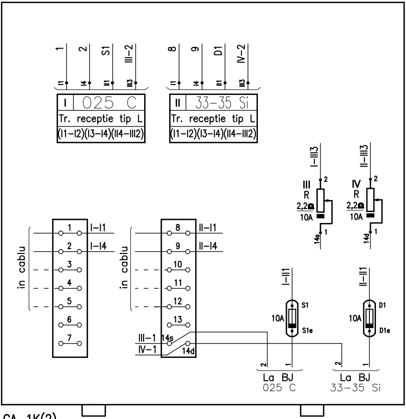
1
2
S1
III–2
I1
I4
II1
III3
8
9
D1
IV–2
I1
I4
II1
III3
I | 025 C
Tr. receptie tip L
(I1–I2)(I3–I4)(II4–III2)
II | 33–35 Si
Tr. receptie tip L
(I1–I2)(I3–I4)(II4–III2)
I–III3
2
III
R
2,2Ω
10A
1
14s
II–III3
2
IV
R
2,2Ω
10A
1
14d
in cablu
1
I–I1
2
I–I4
3
4
5
6
7
in cablu
8
II–I1
9
II–I4
10
11
12
13
III–1
14s
IV–1
14d
I–II1
S1
10A
S1e
II–II1
D1
10A
D1e
2
1
La BJ
025 C
2
1
La BJ
33–35 Si

CA–1K(2)
BIF

025 C; 33–35 Si

CUTIE APARATAJ PENTRU DOUA RECEPTII