NOTA: Acest desen nu constituie o obligatie de aplicare de către contractor.
El reprezintă doar un exemplu de circuit de cale utilizat la CFR si nu trebuie aplicat ca atare.

NOTE: It is not compulsory for the contractor to apply this drawing.
It is only an example of track circuit in use at CFR and shall not be applied as such.

D					
C					
B					
A					
Indice Index	Data Date	Modificare Modification/Revision	Proiectant Designer	Aprobat Consultant Approved Consultant	Aprobat CFR Approved CFR

GUVERNUL ROMANIEI
ROMANIAN GOVERNMENT

PROIECT FINANŢAT DE UNIUNEA EUROPEANĂ
EUROPEAN UNION FINANCED PROJECT

CFR

C.N.C.F. "C.F.R." - S.A.

CLIENT / CLIENT

ITALFERR
GRUPPO FERROVIE DELLO STATO
Joint Venture leader

Scott Wilson

OBERMEYER
PLANEN + BERATEN GmbH

TECNIC
Consulting Engineers

CONSULTANT / CONSULTANT

			Data Date	Semnătură Signature
Aprobat Approved	Şef proiect Project manager	R. Liuzza	12.2011	
Aprobat Approved	Coordonator Secţiune 1 Section 1 Coordinator	C. Gambelli	12.2011	
Verificat Checked	Expert Cheie Key Expert	P. Amodio	12.2011	

SUBCONTRACTANT / SUBCONTRACTOR

AREX COMPANY

Aprobat Approved	Responsabil Subconsultant Subconsultant Responsible	A. Stanciu - Dinulescu	12.2011	
Întocmit Elaborated	Proiectant Designer	Angelescu Sergiu	12.2011	

Reabilitarea liniei de cale ferata Brasov - Simeria, parte componentă a coridorului IV Pan European, pentru circulaţia trenurilor cu viteza maximă de 160 km/h,
Tronsonul : Braşov - Sighişoara
Rehabilitation of the railway line Braşov - Simeria, component Part of the IV Pan-European Corridor, for the trains circulation with maximum speed of 160 km/h,
Section : Braşov - Sighişoara

Proiect/Project
2004/RO/16/P/PA/003

Faza / Phase:
D.E. / D.D.

Denumire desen / Drawing Title :

Statia / Station CATA
Schema releelor de cale
Scheme for track circuits relay

Codificare / Codification System	Scara / Scale Fără / No scale	LOT / LOT	Nr. / No 01 / 05

E A 5 1   0 1   E   1 3   B X   S E   0 1   3   2   0 1 6   0

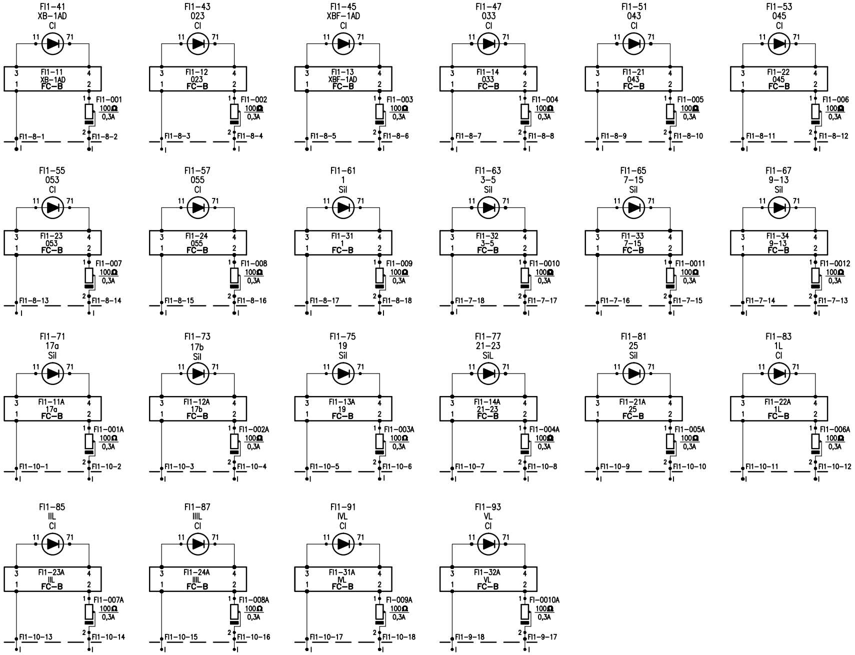
FI1-41 XB-1AD CI; 11; 71; 3 FI1-11 4; XB-1AD; 1 FC-B 2; FI1-001 100Ω 0,3A; FI1-8-1; FI1-8-2
FI1-43 023 CI; FI1-12 023 FC-B; FI1-002 100Ω 0,3A; FI1-8-3; FI1-8-4
FI1-45 XBF-1AD CI; FI1-13 XBF-1AD FC-B; FI1-003 100Ω 0,3A; FI1-8-5; FI1-8-6
FI1-47 033 CI; FI1-14 033 FC-B; FI1-004 100Ω 0,3A; FI1-8-7; FI1-8-8
FI1-51 043 CI; FI1-21 043 FC-B; FI1-005 100Ω 0,3A; FI1-8-9; FI1-8-10
FI1-53 045 CI; FI1-22 045 FC-B; FI1-006 100Ω 0,3A; FI1-8-11; FI1-8-12
FI1-55 053 CI; FI1-23 053 FC-B; FI1-007 100Ω 0,3A; FI1-8-13; FI1-8-14
FI1-57 055 CI; FI1-24 055 FC-B; FI1-008 100Ω 0,3A; FI1-8-15; FI1-8-16
FI1-61 1 SiI; FI1-31 1 FC-B; FI1-009 100Ω 0,3A; FI1-8-17; FI1-8-18
FI1-63 3-5 SiI; FI1-32 3-5 FC-B; FI1-0010 100Ω 0,3A; FI1-7-18; FI1-7-17
FI1-65 7-15 SiI; FI1-33 7-15 FC-B; FI1-0011 100Ω 0,3A; FI1-7-16; FI1-7-15
FI1-67 9-13 SiI; FI1-34 9-13 FC-B; FI1-0012 100Ω 0,3A; FI1-7-14; FI1-7-13
FI1-71 17a SiI; FI1-11A 17a FC-B; FI1-001A 100Ω 0,3A; FI1-10-1; FI1-10-2
FI1-73 17b SiI; FI1-12A 17b FC-B; FI1-002A 100Ω 0,3A; FI1-10-3; FI1-10-4
FI1-75 19 SiI; FI1-13A 19 FC-B; FI1-003A 100Ω 0,3A; FI1-10-5; FI1-10-6
FI1-77 21-23 SiL; FI1-14A 21-23 FC-B; FI1-004A 100Ω 0,3A; FI1-10-7; FI1-10-8
FI1-81 25 SiI; FI1-21A 25 FC-B; FI1-005A 100Ω 0,3A; FI1-10-9; FI1-10-10
FI1-83 1L CI; FI1-22A 1L FC-B; FI1-006A 100Ω 0,3A; FI1-10-11; FI1-10-12
FI1-85 IIL CI; FI1-23A IIL FC-B; FI1-007A 100Ω 0,3A; FI1-10-13; FI1-10-14
FI1-87 IIIL CI; FI1-24A IIIL FC-B; FI1-008A 100Ω 0,3A; FI1-10-15; FI1-10-16
FI1-91 IVL CI; FI1-31A IVL FC-B; FI-009A 100Ω 0,3A; FI1-10-17; FI1-10-18
FI1-93 VL CI; FI1-32A VL FC-B; FI-0010A 100Ω 0,3A; FI1-9-18; FI1-9-17

Statia: CATA

EA51 01 E 13 BX SE 013 2 016 0 02/05

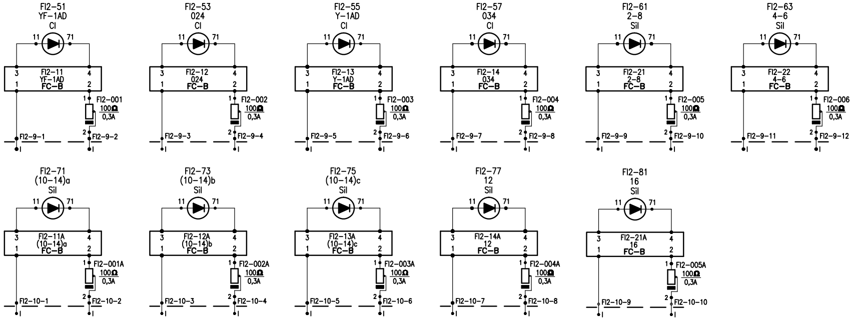
FI2-51
YF-1AD
CI
11
71
3
FI2-11
YF-1AD
FC-B
4
1
2
FI2-001
100Ω
0,3A
FI2-9-1
FI2-9-2
FI2-53
024
CI
FI2-12
024
FC-B
FI2-002
100Ω
0,3A
FI2-9-3
FI2-9-4
FI2-55
Y-1AD
CI
FI2-13
Y-1AD
FC-B
FI2-003
100Ω
0,3A
FI2-9-5
FI2-9-6
FI2-57
034
CI
FI2-14
034
FC-B
FI2-004
100Ω
0,3A
FI2-9-7
FI2-9-8
FI2-61
2-8
Sil
FI2-21
2-8
FC-B
FI2-005
100Ω
0,3A
FI2-9-9
FI2-9-10
FI2-63
4-6
Sil
FI2-22
4-6
FC-B
FI2-006
100Ω
0,3A
FI2-9-11
FI2-9-12
FI2-71
(10-14)a
Sil
FI2-11A
(10-14)a
FC-B
FI2-001A
100Ω
0,3A
FI2-10-1
FI2-10-2
FI2-73
(10-14)b
Sil
FI2-12A
(10-14)b
FC-B
FI2-002A
100Ω
0,3A
FI2-10-3
FI2-10-4
FI2-75
(10-14)c
Sil
FI2-13A
(10-14)c
FC-B
FI2-003A
100Ω
0,3A
FI2-10-5
FI2-10-6
FI2-77
12
Sil
FI2-14A
12
FC-B
FI2-004A
100Ω
0,3A
FI2-10-7
FI2-10-8
FI2-81
16
Sil
FI2-21A
16
FC-B
FI2-005A
100Ω
0,3A
FI2-10-9
FI2-10-10

Statia: CATA

EA51 01 E 13 BX SE 013 2 016 0   03/05

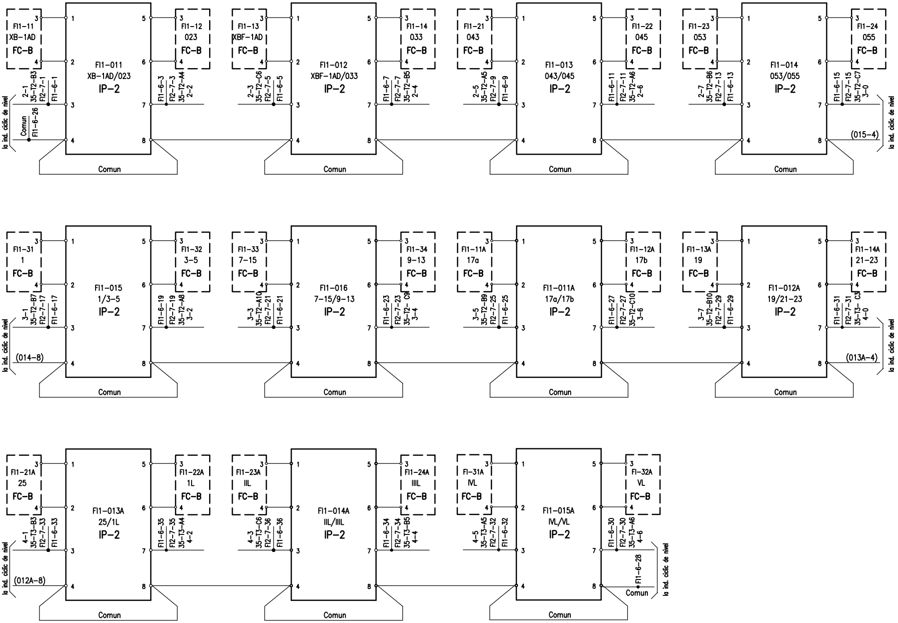

FI1-11
XB-1AD
FC-B
FI1-12
023
FC-B
FI1-011
XB-1AD/023
IP-2
FI1-13
XBF-1AD
FC-B
FI1-14
033
FC-B
FI1-012
XBF-1AD/033
IP-2
FI1-21
043
FC-B
FI1-22
045
FC-B
FI1-013
043/045
IP-2
FI1-23
053
FC-B
FI1-24
055
FC-B
FI1-014
053/055
IP-2
FI1-31
1
FC-B
FI1-32
3-5
FC-B
FI1-015
1/3-5
IP-2
FI1-33
7-15
FC-B
FI1-34
9-13
FC-B
FI1-016
7-15/9-13
IP-2
FI1-11A
17a
FC-B
FI1-12A
17b
FC-B
FI1-011A
17a/17b
IP-2
FI1-13A
19
FC-B
FI1-14A
21-23
FC-B
FI1-012A
19/21-23
IP-2
FI1-21A
25
FC-B
FI1-22A
1L
FC-B
FI1-013A
25/1L
IP-2
FI1-23A
IIL
FC-B
FI1-24A
IIIL
FC-B
FI1-014A
IIL/IIIL
IP-2
FI-31A
IVL
FC-B
FI-32A
VL
FC-B
FI1-015A
IVL/VL
IP-2
2-1
35-T2-B3
FI2-7-1
FI1-6-1
FI1-6-3
FI2-7-3
35-T2-A4
2-2
2-3
35-T2-C6
FI2-7-5
FI1-6-5
FI1-6-7
FI2-7-7
35-T2-B5
2-4
2-5
35-T2-A5
FI2-7-9
FI1-6-9
FI1-6-11
FI2-7-11
35-T2-A6
2-6
2-7
35-T2-B6
FI2-7-13
FI1-6-13
FI1-6-15
FI2-7-15
35-T2-C7
3-0
3-1
35-T2-B7
FI2-7-17
FI1-6-17
FI1-6-19
FI2-7-19
35-T2-A8
3-2
3-3
35-T2-A10
FI2-7-21
FI1-6-21
FI1-6-23
FI2-7-23
35-T2- C9
3-4
3-5
35-T2-B9
FI2-7-25
FI1-6-25
FI1-6-27
FI2-7-27
35-T2-C10
3-6
3-7
35-T2-B10
FI2-7-29
FI1-6-29
FI1-6-31
FI2-7-31
35-T3- C3
4-0
4-1
35-T3-B3
FI2-7-33
FI1-6-33
FI1-6-35
FI2-7-35
35-T3-A4
4-2
4-3
35-T3-C6
FI2-7-36
FI1-6-36
FI1-6-34
FI2-7-34
35-T3-B5
4-4
4-5
35-T3-A5
FI2-7-32
FI1-6-32
FI1-6-30
FI2-7-30
35-T3-A6
4-6
Comun
FI1-6-26
FI1-6-28
la ind. ciclic de nivel
(015-4)
(014-8)
(013A-4)
(012A-8)
Comun

Statia: CATA

EA51 01 E 13 BX SE 013 2 016 0   04/05

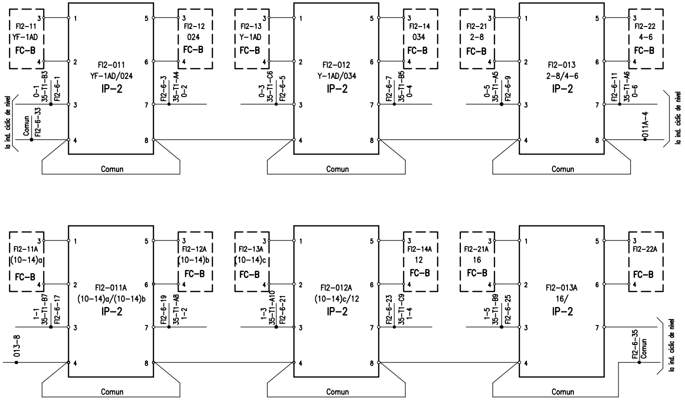
FI2-11
YF-1AD
FC-B
FI2-011
YF-1AD/024
IP-2
FI2-12
024
FC-B
0-1
35-T1-B3
FI2-6-1
FI2-6-3
35-T1-A4
0-2
la ind. ciclic de nivel
Comun
FI2-6-33
Comun
FI2-13
Y-1AD
FC-B
FI2-012
Y-1AD/034
IP-2
FI2-14
034
FC-B
0-3
35-T1-C6
FI2-6-5
FI2-6-7
35-T1-B5
0-4
Comun
FI2-21
2-8
FC-B
FI2-013
2-8/4-6
IP-2
FI2-22
4-6
FC-B
0-5
35-T1-A5
FI2-6-9
FI2-6-11
35-T1-A6
0-6
011A-4
la ind. ciclic de nivel
Comun
FI2-11A
(10-14)a
FC-B
FI2-011A
(10-14)a/(10-14)b
IP-2
FI2-12A
(10-14)b
FC-B
1-1
35-T1-B7
FI2-6-17
FI2-6-19
35-T1-A8
1-2
013-8
Comun
FI2-13A
(10-14)c
FC-B
FI2-012A
(10-14)c/12
IP-2
FI2-14A
12
FC-B
1-3
35-T1-A10
FI2-6-21
FI2-6-23
35-T1-C9
1-4
Comun
FI2-21A
16
FC-B
FI2-013A
16/
IP-2
FI2-22A
FC-B
1-5
35-T1-B9
FI2-6-25
FI2-6-35
Comun
la ind. ciclic de nivel
Comun
1
2
3
4
5
6
7
8

Statia: CATA