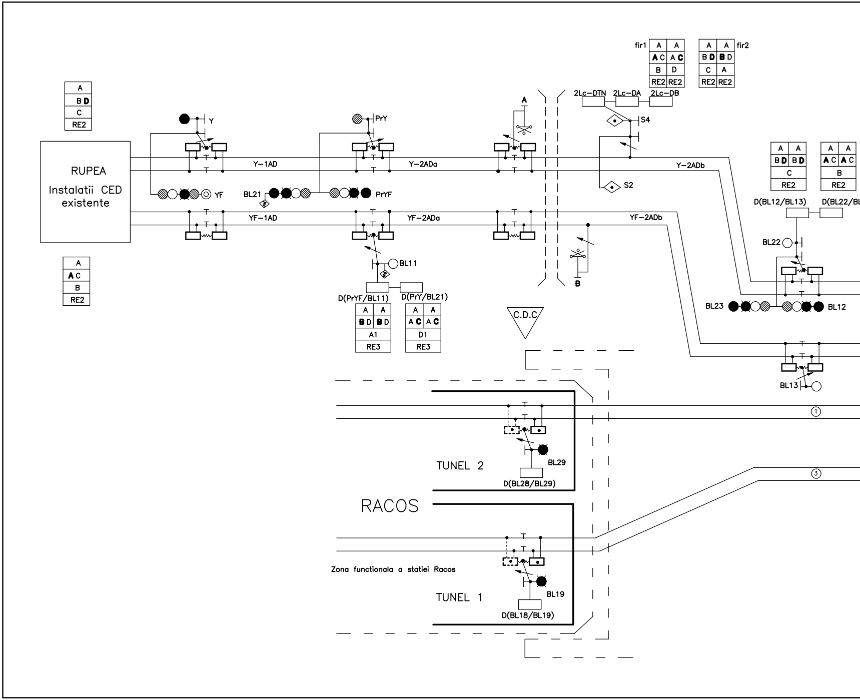
fir1
A A
A C A C
B D
RE2 RE2
A A
B D B D
C A
RE2 RE2
fir2
A
B D
C
RE2
Y
PrY
A
2Lc-DTN
2Lc-DA
2Lc-DB
S4
RUPEA
Instalatii CED existente
Y-1AD
Y-2ADa
Y-2ADb
YF
BL21
PrYF
S2
YF-1AD
YF-2ADa
YF-2ADb
A A
B D B D
C
RE2
A A
A C A C
B
RE2
D(BL12/BL13)
D(BL22/BL
BL22
A
A C
B
RE2
BL11
B
D(PrYF/BL11)
D(PrY/BL21)
A A
B D B D
A1
RE3
A A
A C A C
D1
RE3
C.D.C
BL23
BL12
BL13
①
BL29
TUNEL 2
D(BL28/BL29)
③
RACOS
Zona functionala a statiei Racos
BL19
TUNEL 1
D(BL18/BL19)

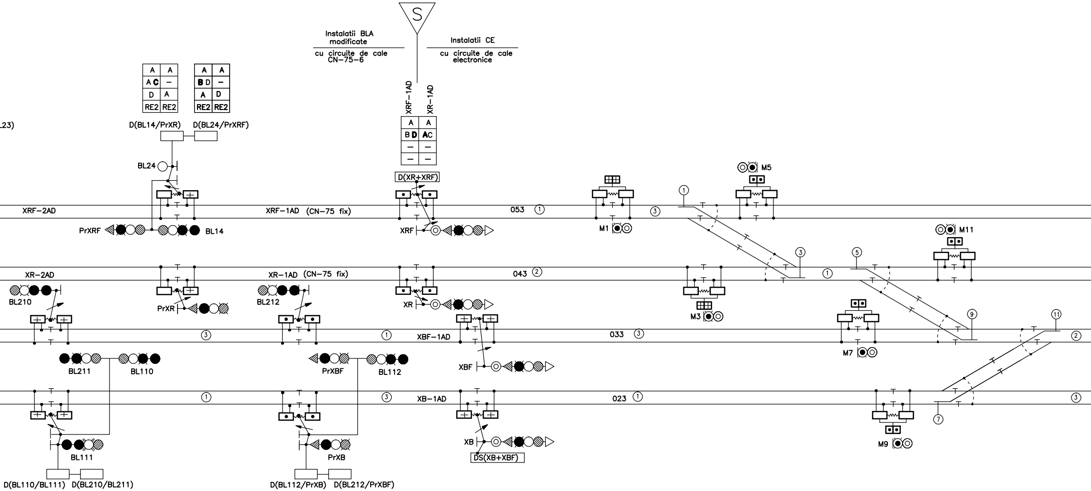
S
Instalatii BLA modificate
cu circuite de cale CN-75-6
Instalatii CE
cu circuite de cale electronice
XRF-1AD
XR-1AD
A | A
B D | A C
– | –
– | –
D(XR+XRF)
A | A
A C | –
D | A
RE2 | RE2
A | A
B D | –
A | D
RE2 | RE2
L23)
D(BL14/PrXR)
D(BL24/PrXRF)
BL24
XRF-2AD
XRF-1AD (CN-75 fix)
PrXRF
BL14
XRF
053 ①
③
M1
M5
①
③
M11
⑤
①
XR-2AD
XR-1AD (CN-75 fix)
043 ②
BL210
PrXR
BL212
XR
M3
⑨
⑪
②
③
①
XBF-1AD
033 ③
BL211
BL110
PrXBF
BL112
XBF
M7
①
③
XB-1AD
023 ①
③
⑦
BL111
PrXB
XB
DS(XB+XBF)
M9
D(BL110/BL111)
D(BL210/BL211)
D(BL112/PrXB)
D(BL212/PrXBF)

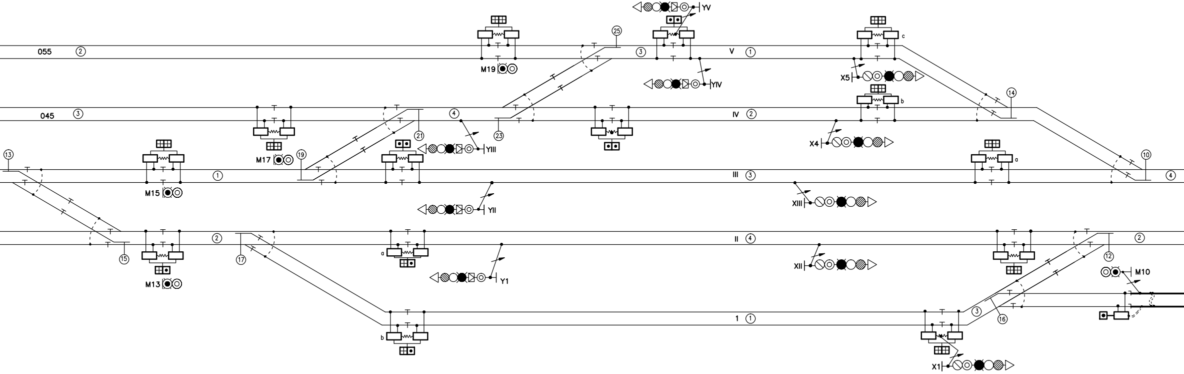
055
②
045
③
⑬
M15
①
M17
⑲
⑮
M13
②
⑰
M19
④
㉑
YIII
㉓
㉕
③
YV
V
①
YIV
IV
②
c
b
X5
X4
⑭
III
③
a
⑩
④
YII
XIII
II
④
a
XII
Y1
1
①
b
X1
③
⑯
⑫
M10
②

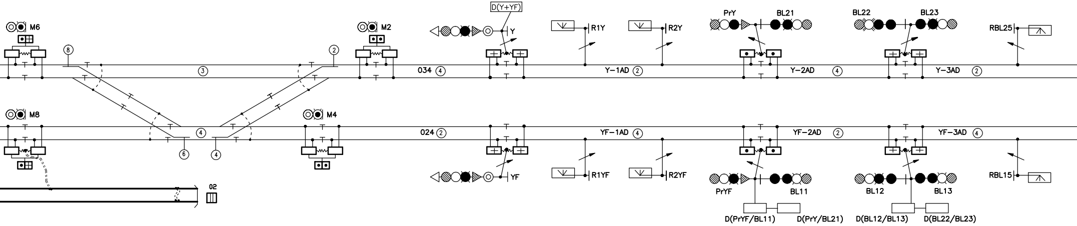
D(Y+YF)
M6
M2
Y
R1Y
R2Y
PrY
BL21
BL22
BL23
RBL25
8
2
3
034 4
Y–1AD 2
Y–2AD 4
Y–3AD 2
M8
M4
4
024 2
YF–1AD 4
YF–2AD 2
YF–3AD 4
6
4
YF
R1YF
R2YF
RBL15
02
PrYF
BL11
BL12
BL13
D(PrYF/BL11)
D(PrY/BL21)
D(BL12/BL13)
D(BL22/BL23)

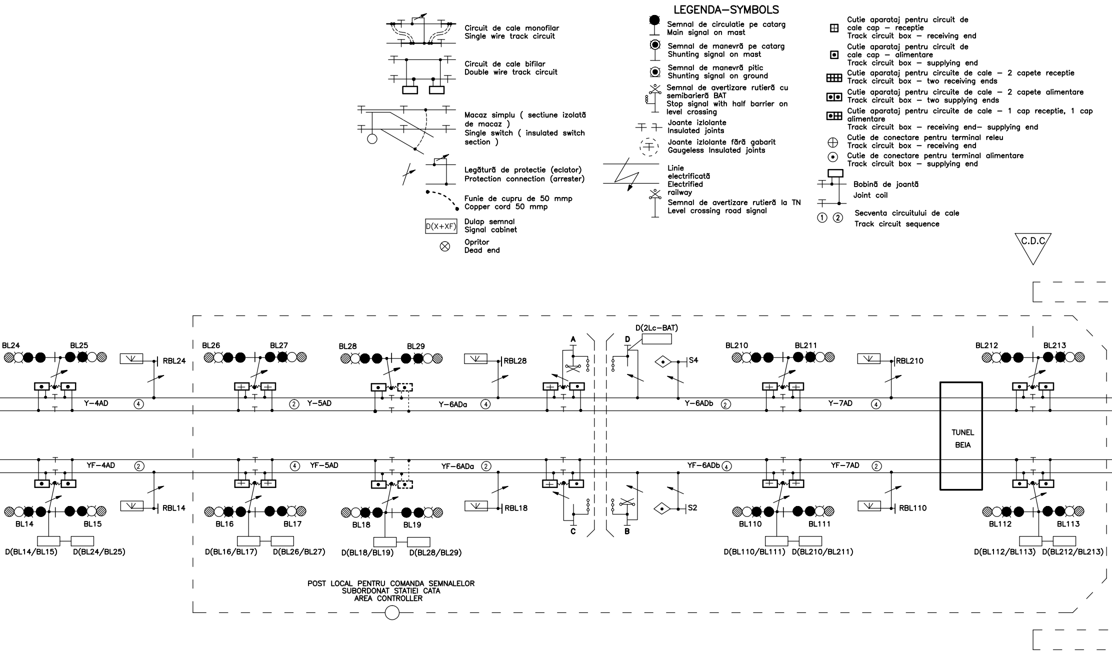

LEGENDA-SYMBOLS

Circuit de cale monofilar
Single wire track circuit

Circuit de cale bifilar
Double wire track circuit

Macaz simplu (sectiune izolată de macaz)
Single switch (insulated switch section)

Legătură de protectie (eclator)
Protection connection (arrester)

Funie de cupru de 50 mmp
Copper cord 50 mmp

D(X+XF) Dulap semnal
Signal cabinet

Opritor
Dead end

Semnal de circulatie pe catarg
Main signal on mast

Semnal de manevră pe catarg
Shunting signal on mast

Semnal de manevră pitic
Shunting signal on ground

Semnal de avertizare rutieră cu semibarieră BAT
Stop signal with half barrier on level crossing

Joante izlolante
Insulated joints

Joante izlolante fără gabarit
Gaugeless Insulated joints

Linie electrificată
Electrified railway

Semnal de avertizare rutieră la TN
Level crossing road signal

Cutie aparataj pentru circuit de cale cap – receptie
Track circuit box – receiving end

Cutie aparataj pentru circuit de cale cap – alimentare
Track circuit box – supplying end

Cutie aparataj pentru circuite de cale – 2 capete receptie
Track circuit box – two receiving ends

Cutie aparataj pentru circuite de cale – 2 capete alimentare
Track circuit box – two supplying ends

Cutie aparataj pentru circuite de cale – 1 cap receptie, 1 cap alimentare
Track circuit box – receiving end– supplying end

Cutie de conectare pentru terminal releu
Track circuit box – receiving end

Cutie de conectare pentru terminal alimentare
Track circuit box – supplying end

Bobină de joantă
Joint coil

① ② Secventa circuitului de cale
Track circuit sequence

C.D.C
BL24
BL25
RBL24
BL26
BL27
BL28
BL29
RBL28
A
D
D(2Lc–BAT)
S4
BL210
BL211
RBL210
BL212
BL213
Y–4AD ④
② Y–5AD
Y–6ADa ④
Y–6ADb ②
Y–7AD ④
TUNEL
BEIA
YF–4AD ②
④ YF–5AD
YF–6ADa ②
YF–6ADb ④
YF–7AD ②
BL14
BL15
RBL14
BL16
BL17
BL18
BL19
RBL18
C
B
S2
BL110
BL111
RBL110
BL112
BL113
D(BL14/BL15)
D(BL24/BL25)
D(BL16/BL17)
D(BL26/BL27)
D(BL18/BL19)
D(BL28/BL29)
D(BL110/BL111)
D(BL210/BL211)
D(BL112/BL113)
D(BL212/BL213)
POST LOCAL PENTRU COMANDA SEMNALELOR
SUBORDONAT STATIEI CATA
AREA CONTROLLER

S	Granita instalatiei de centralizare electronica Electronic interlocking border
C.D.C	SEPARARE CIRCUITE DE CALE TRACK CIRCUITS SEPARATION

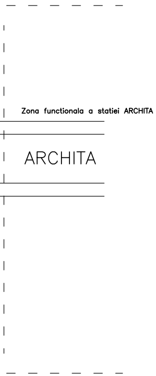
Zona functionala a statiei ARCHITA
ARCHITA

D					
C					
B					
A					
Indice Index	Data Date	Modificare Modification/Revision	Proiectant Designer	Aprobat Consultant Approved Consultant	Aprobat CFR Approved CFR

GUVERNUL ROMANIEI
ROMANIAN GOVERNMENT

PROIECT FINANȚAT DE UNIUNEA EUROPEANĂ
EUROPEAN UNION FINANCED PROJECT

CLIENT / CLIENT

CFR

C.N.C.F. "C.F.R." - S.A.

ITALFERR
GRUPPO FERROVIE DELLO STATO
Joint Venture leader

Scott Wilson

OBERMEYER
PLANEN + BERATEN GmbH

TECNIC
Consulting Engineers

CONSULTANT / CONSULTANT

			Data Date	Semnătură Signature
Aprobat Approved	Şef proiect Project manager	R. Liuzza	02.2012	
Aprobat Approved	Coordonator Secțiune 1 Section 1 Coordinator	C. Gambelli	02.2012	
Verificat Checked	Expert Cheie Key Expert	P. Amodio	02.2012	

SUBCONTRACTANT / SUBCONTRACTOR

AREX COMPANY

Aprobat Approved	Responsabil Subconsultant Subconsultant Responsible	A. Stanciu - Dinulescu	02.2012	
Întocmit Elaborated	Proiectant Designer	Ing. Teodorescu Viorel	02.2012	

Reabilitarea liniei de cale ferata Braşov - Simeria, parte componentă a coridorului IV Pan European, pentru circulația trenurilor cu viteza maximă de 160 km/h,
Tronsonul : Braşov - Sighişoara
Rehabilitation of the railway line Braşov - Simeria, component Part of the IV Pan-European Corridor, for the trains circulation with maximum speed of 160 km/h,
Section : Braşov - Sighişoara

Proiect/Project
2004/RO/16/P/PA/003

Faza / Phase:
P.Th. / T.D.

Denumire desen / Drawing Title :

Statia / Station CATA
Plan bifilar de izolare
Track circuit plan

Codificare / Codification System	Scara / Scale Fără / No scale	LOT / LOT	Nr. / No 01 / 01

E A 5 1 | 0 1 | C | 1 3 | U X | S E | 0 1 | 3 | 2 | 0 0 3 | 1