LEGENDA
SYMBOLS

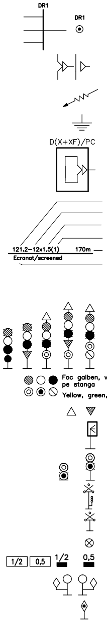
DR1
DR1
D(X+XF)/PC
121.2-12x1,5(1)
170m
Ecranat/screened
1/2
0,5
1/2
0,5

Distribuitor de cabluri
Distribution box no 1

Cap de cablu cu/fara impamantare
Cable terminal with/without earth

Legatura echipotentiala
Equipotential connection

Priza de pamant
Earth terminal

Dulap semnal/Post centralizare
Signal cabinet/Central post

Numarul cablului/Cable no.
Numar de conductoare/Total number of conductors in cable
Sectiunea conductorului/Conductor section
Conductor de rezerva/Spare conductor(s)
Lungimea cablului/Length of cable
Tipul cablului/Cable type
Daca tipul cablului nu este specificat acesta va fi considerat neecranat.
If the cable type is not specified it will be considered unscreened

Semnal de circulatie pe catarg
Main signal on mast

Foc galben, verde, rosu, alb, albastru, indicator circulatie pe stanga
Yellow, green, red, withe, blue, traffic on left indicator lamp

Indicatoare de viteza
Speed and prespeed indicators

Semnal repetitor
Repeater signal

Semnal de manevra pe catarg
Shunting signal on ground / mast

Semibariera automata cu semnal rutier la tn
Level crossing (LC) halfbarriers with road signal

Semnal rutier la trecere la nivel
Level crossing road signal

Opritor
Dead end

Inductor indusi 500Hz sau 1000/2000Hz
500Hz or 1000/2000Hz indusi inductor

Semnal BLA cu reper de avarie pentru TN
ABL signal with fix damage indicator for LC

Semnal avarie la TN
Warning signal for LC

D					
C					
B					
A					
Indice **Index**	**Data** **Date**	**Modificare** **Modification/Revision**	**Proiectant** **Designer**	**Aprobat Consultant** **Approved Consultant**	**Aprobat CFR** **Approved CFR**

GUVERNUL ROMANIEI
ROMANIAN GOVERNMENT

PROIECT FINANŢAT DE UNIUNEA EUROPEANĂ
EUROPEAN UNION FINANCED PROJECT

CLIENT / CLIENT

C.N.C.F. "C.F.R." - S.A.

ITALFERR
GRUPPO FERROVIE DELLO STATO
Joint Venture leader

Scott Wilson

OBERMEYER
PLANEN + BERATEN GmbH

TECNIC
Consulting Engineers

CONSULTANT / CONSULTANT			**Data** **Date**	**Semnătură** **Signature**
Aprobat **Approved**	**Şef proiect** **Project manager**	R. Lluzza	02.2012	
Aprobat **Approved**	**Coordonator Secţiune 1** **Section 1 Coordinator**	C. Gambelli	02.2012	
Verificat **Checked**	**Expert Cheie** **Key Expert**	P. Amodio	02.2012	

SUBCONTRACTANT / SUBCONTRACTOR

AREX COMPANY

Aprobat **Approved**	**Responsabil Subconsultant** **Subconsultant Responsible**	A. Stanciu - Dinulescu	02.2012	
Întocmit **Elaborated**	**Proiectant** **Designer**	M. Holbură	02.2012	

Reabilitarea liniei de cale ferata Braşov - Simeria, parte componentă a coridorului IV Pan European, pentru circulaţia trenurilor cu viteza maximă de 160 km/h,
Tronsonul : Braşov - Sighişoara
Rehabilitation of the railway line Braşov - Simeria, component Part of the IV Pan-European Corridor, for the trains circulation with maximum speed of 160 km/h,
Section : Braşov - Sighişoara

Proiect/Project
2004/RO/16/P/PA/003

Faza / Phase:
P.Th. / T.D.

Denumire desen / Drawing Title :

Statia / Station CATA
Plan cablaj retele cabluri dulapuri de semnale
Cable lay-out for signal cabinet

Codificare / Codification System	**Scara / Scale** **Fără / No scale**	**LOT / LOT**	**Nr. / No** **01 / 04**

E A 5 1 | 0 1 | C | 1 3 | U X | S E | 0 1 | 3 | 2 | 0 1 2 | 2

(420x297)

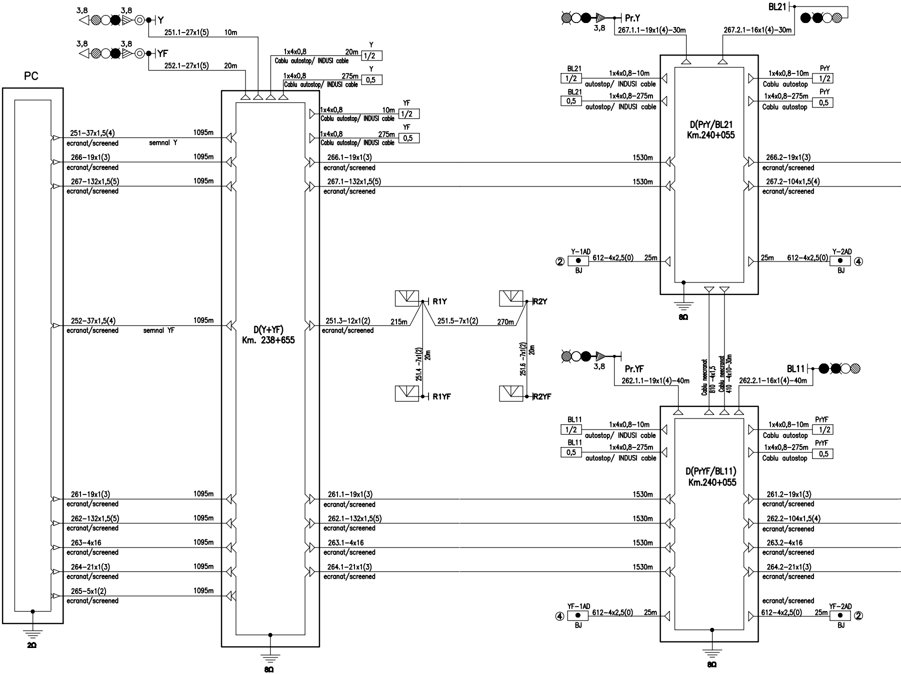
3,8
3,8
Y
251.1–27x1(5)
10m
3,8
3,8
YF
252.1–27x1(5)
20m
1x4x0,8
Cablu autostop/ INDUSI cable
20m
Y
1/2
1x4x0,8
Cablu autostop/ INDUSI cable
275m
Y
0,5
PC
1x4x0,8
Cablu autostop/ INDUSI cable
10m
YF
1/2
1x4x0,8
Cablu autostop/ INDUSI cable
275m
YF
0,5
251–37x1,5(4)
ecranat/screened
semnal Y
1095m
266–19x1(3)
ecranat/screened
1095m
267–132x1,5(5)
ecranat/screened
1095m
266.1–19x1(3)
ecranat/screened
1530m
267.1–132x1,5(5)
ecranat/screened
1530m
Pr.Y
3,8
267.1.1–19x1(4)–30m
BL21
267.2.1–16x1(4)–30m
BL21
1/2
1x4x0,8–10m
autostop/ INDUSI cable
BL21
0,5
1x4x0,8–275m
autostop/ INDUSI cable
1x4x0,8–10m
Cablu autostop
PrY
1/2
1x4x0,8–275m
Cablu autostop
PrY
0,5
D(PrY/BL21
Km.240+055
266.2–19x1(3)
ecranat/screened
267.2–104x1,5(4)
ecranat/screened
②
Y–1AD
BJ
612–4x2,5(0)
25m
25m
612–4x2,5(0)
Y–2AD
BJ
④
8Ω
252–37x1,5(4)
ecranat/screened
semnal YF
1095m
D(Y+YF)
Km. 238+655
251.3–12x1(2)
ecranat/screened
215m
R1Y
251.5–7x1(2)
270m
R2Y
251.4 –7x1(2)
20m
251.6 –7x1(2)
20m
R1YF
R2YF
Pr.YF
3,8
262.1.1–19x1(4)–40m
Cablu neecranat
810 –4x1,5
Cablu neecranat
410 –4x10–30m
BL11
262.2.1–16x1(4)–40m
BL11
1/2
1x4x0,8–10m
autostop/ INDUSI cable
BL11
0,5
1x4x0,8–275m
autostop/ INDUSI cable
1x4x0,8–10m
Cablu autostop
PrYF
1/2
1x4x0,8–275m
Cablu autostop
PrYF
0,5
D(PrYF/BL11)
Km.240+055
261–19x1(3)
ecranat/screened
1095m
262–132x1,5(5)
ecranat/screened
1095m
263–4x16
ecranat/screened
1095m
264–21x1(3)
ecranat/screened
1095m
265–5x1(2)
ecranat/screened
1095m
261.1–19x1(3)
ecranat/screened
1530m
262.1–132x1,5(5)
ecranat/screened
1530m
263.1–4x16
ecranat/screened
1530m
264.1–21x1(3)
ecranat/screened
1530m
261.2–19x1(3)
ecranat/screened
262.2–104x1,5(4)
ecranat/screened
263.2–4x16
ecranat/screened
264.2–21x1(3)
ecranat/screened
④
YF–1AD
BJ
612–4x2,5(0)
25m
ecranat/screened
612–4x2,5(0)
25m
YF–2AD
BJ
②
2Ω
8Ω
8Ω

Statia: Cata

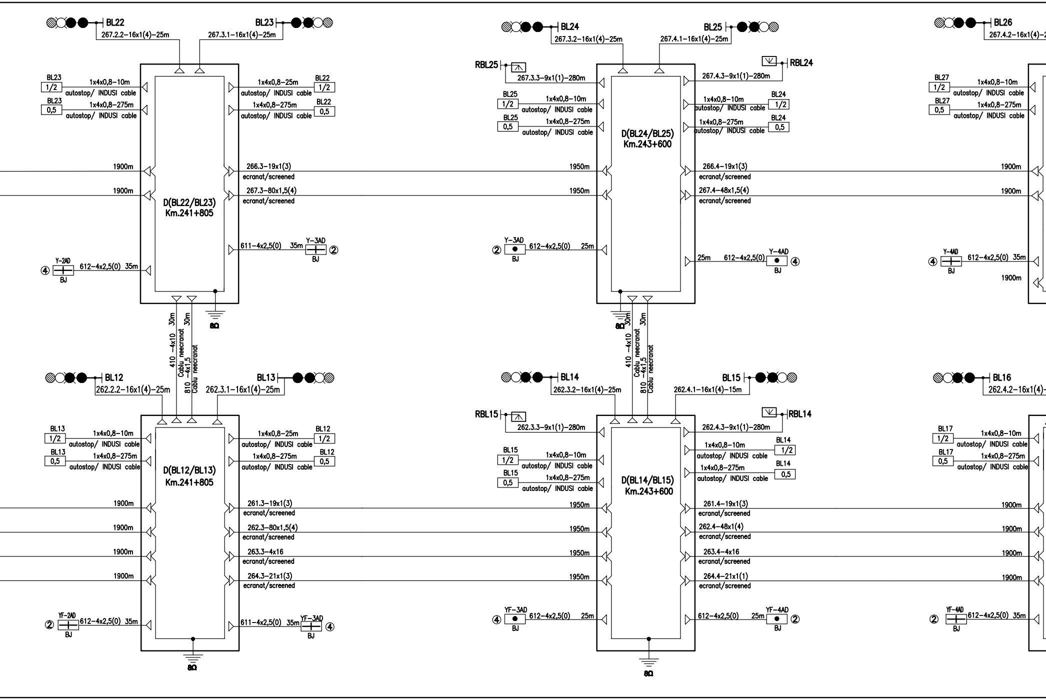
BL22
267.2.2-16x1(4)-25m
BL23
267.3.1-16x1(4)-25m
BL23
1/2
1x4x0,8-10m
autostop/ INDUSI cable
BL23
0,5
1x4x0,8-275m
autostop/ INDUSI cable
1x4x0,8-25m
autostop/ INDUSI cable
BL22
1/2
1x4x0,8-275m
autostop/ INDUSI cable
BL22
0,5
1900m
266.3-19x1(3)
ecranat/screened
1900m
267.3-80x1,5(4)
ecranat/screened
D(BL22/BL23)
Km.241+805
611-4x2,5(0)
35m
Y-3AD
BJ
②
Y-2AD
④
BJ
612-4x2,5(0)
35m
8Ω
30m
410 -4x10
30m
Cablu neecranat
810 -4x1,5
Cablu neecranat
BL24
267.3.2-16x1(4)-25m
BL25
267.4.1-16x1(4)-25m
RBL25
267.3.3-9x1(1)-280m
RBL24
267.4.3-9x1(1)-280m
BL25
1/2
1x4x0,8-10m
autostop/ INDUSI cable
BL25
0,5
1x4x0,8-275m
autostop/ INDUSI cable
1x4x0,8-10m
autostop/ INDUSI cable
BL24
1/2
1x4x0,8-275m
autostop/ INDUSI cable
BL24
0,5
D(BL24/BL25)
Km.243+600
1950m
266.4-19x1(3)
ecranat/screened
1950m
267.4-48x1,5(4)
ecranat/screened
Y-3AD
②
BJ
612-4x2,5(0)
25m
25m
612-4x2,5(0)
Y-4AD
BJ
④
8Ω
30m
410 -4x10
Cablu neecranat
810 -4x1,5
Cablu neecranat
BL26
267.4.2-16x1(4)-
BL27
1/2
1x4x0,8-10m
autostop/ INDUSI cable
BL27
0,5
1x4x0,8-275m
autostop/ INDUSI cable
1900m
1900m
Y-4AD
④
BJ
612-4x2,5(0)
35m
1900m
BL12
262.2.2-16x1(4)-25m
BL13
262.3.1-16x1(4)-25m
BL13
1/2
1x4x0,8-10m
autostop/ INDUSI cable
BL13
0,5
1x4x0,8-275m
autostop/ INDUSI cable
1x4x0,8-25m
autostop/ INDUSI cable
BL12
1/2
1x4x0,8-275m
autostop/ INDUSI cable
BL12
0,5
D(BL12/BL13)
Km.241+805
1900m
261.3-19x1(3)
ecranat/screened
1900m
262.3-80x1,5(4)
ecranat/screened
1900m
263.3-4x16
ecranat/screened
1900m
264.3-21x1(3)
ecranat/screened
YF-2AD
②
BJ
612-4x2,5(0)
35m
611-4x2,5(0)
35m
YF-3AD
BJ
④
8Ω
BL14
262.3.2-16x1(4)-25m
BL15
262.4.1-16x1(4)-15m
RBL15
262.3.3-9x1(1)-280m
RBL14
262.4.3-9x1(1)-280m
BL15
1/2
1x4x0,8-10m
autostop/ INDUSI cable
BL15
0,5
1x4x0,8-275m
autostop/ INDUSI cable
1x4x0,8-10m
autostop/ INDUSI cable
BL14
1/2
1x4x0,8-275m
autostop/ INDUSI cable
BL14
0,5
D(BL14/BL15)
Km.243+600
1950m
261.4-19x1(3)
ecranat/screened
1950m
262.4-48x1(4)
ecranat/screened
1950m
263.4-4x16
ecranat/screened
1950m
264.4-21x1(1)
ecranat/screened
YF-3AD
④
BJ
612-4x2,5(0)
25m
612-4x2,5(0)
25m
YF-4AD
BJ
②
8Ω
BL16
262.4.2-16x1(4)-
BL17
1/2
1x4x0,8-10m
autostop/ INDUSI cable
BL17
0,5
1x4x0,8-275m
autostop/ INDUSI cable
1900m
1900m
1900m
1900m
YF-4AD
②
BJ
612-4x2,5(0)
35m

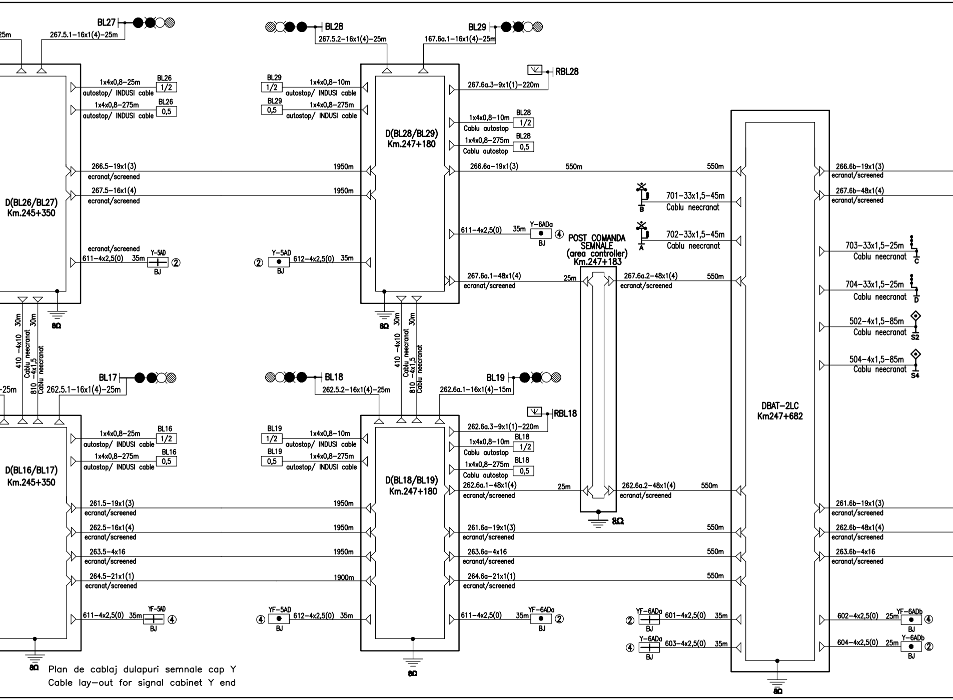
BL27
267.5.1–16x1(4)–25m
BL28
267.5.2–16x1(4)–25m
BL29
167.6a.1–16x1(4)–25m
RBL28
267.6a.3–9x1(1)–220m
1x4x0,8–25m
autostop/ INDUSI cable
BL26
1/2
1x4x0,8–275m
autostop/ INDUSI cable
BL26
0,5
BL29
1/2
1x4x0,8–10m
autostop/ INDUSI cable
BL29
0,5
1x4x0,8–275m
autostop/ INDUSI cable
D(BL28/BL29)
Km.247+180
1x4x0,8–10m
Cablu autostop
BL28
1/2
1x4x0,8–275m
Cablu autostop
BL28
0,5
D(BL26/BL27)
Km.245+350
266.5–19x1(3)
ecranat/screened
1950m
267.5–16x1(4)
ecranat/screened
1950m
266.6a–19x1(3)
550m
550m
266.6b–19x1(3)
ecranat/screened
267.6b–48x1(4)
ecranat/screened
701–33x1,5–45m
Cablu neecranat
B
702–33x1,5–45m
Cablu neecranat
A
703–33x1,5–25m
Cablu neecranat
C
704–33x1,5–25m
Cablu neecranat
D
502–4x1,5–85m
Cablu neecranat
S2
504–4x1,5–85m
Cablu neecranat
S4
611–4x2,5(0)
35m
Y–6ADa
④
BJ
POST COMANDA SEMNALE
(area controller)
Km.247+183
ecranat/screened
611–4x2,5(0)
35m
Y–5AD
②
BJ
②
Y–5AD
612–4x2,5(0)
35m
BJ
267.6a.1–48x1(4)
ecranat/screened
25m
267.6a.2–48x1(4)
ecranat/screened
550m
8Ω
30m
30m
410 –4x10
Cablu neecranat
810 –4x1,5
Cablu neecranat
8Ω
30m
30m
410 –4x10
Cablu neecranat
810 –4x1,5
Cablu neecranat
BL17
262.5.1–16x1(4)–25m
BL18
262.5.2–16x1(4)–25m
BL19
262.6a.1–16x1(4)–15m
RBL18
262.6a.3–9x1(1)–220m
DBAT–2LC
Km247+682
1x4x0,8–25m
autostop/ INDUSI cable
BL16
1/2
1x4x0,8–275m
autostop/ INDUSI cable
BL16
0,5
BL19
1/2
1x4x0,8–10m
autostop/ INDUSI cable
BL19
0,5
1x4x0,8–275m
autostop/ INDUSI cable
1x4x0,8–10m
Cablu autostop
BL18
1/2
1x4x0,8–275m
Cablu autostop
BL18
0,5
D(BL16/BL17)
Km.245+350
D(BL18/BL19)
Km.247+180
262.6a.1–48x1(4)
ecranat/screened
25m
262.6a.2–48x1(4)
ecranat/screened
550m
8Ω
261.5–19x1(3)
ecranat/screened
1950m
262.5–16x1(4)
ecranat/screened
1950m
263.5–4x16
ecranat/screened
1950m
264.5–21x1(1)
ecranat/screened
1900m
261.6a–19x1(3)
ecranat/screened
550m
263.6a–4x16
ecranat/screened
550m
264.6a–21x1(1)
ecranat/screened
550m
261.6b–19x1(3)
ecranat/screened
262.6b–48x1(4)
ecranat/screened
263.6b–4x16
ecranat/screened
611–4x2,5(0)
35m
YF–5AD
④
BJ
④
YF–5AD
612–4x2,5(0)
35m
BJ
611–4x2,5(0)
35m
YF–6ADa
②
BJ
②
YF–6ADa
601–4x2,5(0)
35m
BJ
④
Y–6ADa
603–4x2,5(0)
35m
BJ
602–4x2,5(0)
25m
YF–6ADb
④
BJ
604–4x2,5(0)
25m
Y–6ADb
②
BJ
8Ω
8Ω
8Ω
–25m
–25m

Plan de cablaj dulapuri semnale cap Y
Cable lay-out for signal cabinet Y end

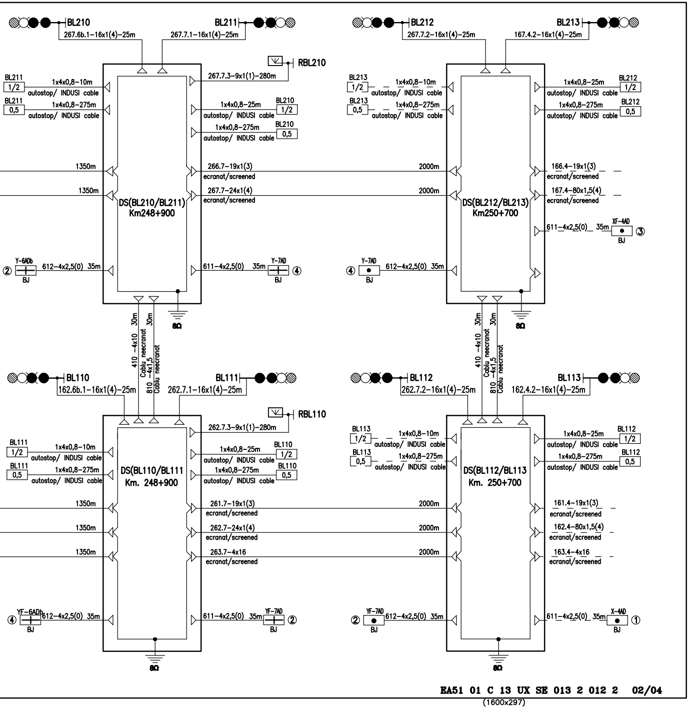

BL210
267.6b.1–16x1(4)–25m
BL211
267.7.1–16x1(4)–25m
BL212
267.7.2–16x1(4)–25m
BL213
167.4.2–16x1(4)–25m
RBL210
267.7.3–9x1(1)–280m
BL211
1/2
1x4x0,8–10m
autostop/ INDUSI cable
BL211
0,5
1x4x0,8–275m
autostop/ INDUSI cable
1x4x0,8–25m
autostop/ INDUSI cable
BL210
1/2
1x4x0,8–275m
autostop/ INDUSI cable
BL210
0,5
BL213
1/2
1x4x0,8–10m
autostop/ INDUSI cable
BL213
0,5
1x4x0,8–275m
autostop/ INDUSI cable
1x4x0,8–25m
autostop/ INDUSI cable
BL212
1/2
1x4x0,8–275m
autostop/ INDUSI cable
BL212
0,5
1350m
266.7–19x1(3)
ecranat/screened
2000m
1350m
267.7–24x1(4)
ecranat/screened
2000m
166.4–19x1(3)
ecranat/screened
167.4–80x1,5(4)
ecranat/screened
DS(BL210/BL211)
Km248+900
DS(BL212/BL213)
Km250+700
611–4x2,5(0)
35m
XF-4AD
BJ
③
②
Y-6ADb
612–4x2,5(0)
35m
BJ
611–4x2,5(0)
35m
Y-7AD
BJ
④
④
Y-7AD
BJ
612–4x2,5(0)
35m
8Ω
8Ω
30m
30m
410 –4x10
Cablu neecranat
810 –4x1,5
Cablu neecranat
30m
30m
410 –4x10
Cablu neecranat
810 –4x1,5
Cablu neecranat
BL110
162.6b.1–16x1(4)–25m
BL111
262.7.1–16x1(4)–25m
BL112
262.7.2–16x1(4)–25m
BL113
162.4.2–16x1(4)–25m
RBL110
262.7.3–9x1(1)–280m
BL111
1/2
1x4x0,8–10m
autostop/ INDUSI cable
BL111
0,5
1x4x0,8–275m
autostop/ INDUSI cable
1x4x0,8–25m
autostop/ INDUSI cable
BL110
1/2
1x4x0,8–275m
autostop/ INDUSI cable
BL110
0,5
BL113
1/2
1x4x0,8–10m
autostop/ INDUSI cable
BL113
0,5
1x4x0,8–275m
autostop/ INDUSI cable
1x4x0,8–25m
autostop/ INDUSI cable
BL112
1/2
1x4x0,8–275m
autostop/ INDUSI cable
BL112
0,5
DS(BL110/BL111
Km. 248+900
DS(BL112/BL113
Km. 250+700
1350m
261.7–19x1(3)
ecranat/screened
2000m
1350m
262.7–24x1(4)
ecranat/screened
2000m
1350m
263.7–4x16
ecranat/screened
2000m
161.4–19x1(3)
ecranat/screened
162.4–80x1,5(4)
ecranat/screened
163.4–4x16
ecranat/screened
④
YF-6ADb
612–4x2,5(0)
35m
BJ
611–4x2,5(0)
35m
YF-7AD
BJ
②
②
YF-7AD
BJ
612–4x2,5(0)
35m
611–4x2,5(0)
35m
X-4AD
BJ
①
8Ω
8Ω

EA51 01 C 13 UX SE 013 2 012 2 02/04

(1600x297)

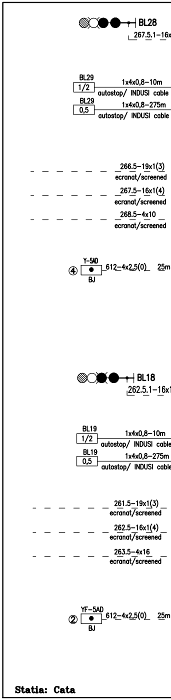

BL28
267.5.1–16x
BL29
1/2
1x4x0,8–10m
autostop/ INDUSI cable
BL29
0,5
1x4x0,8–275m
autostop/ INDUSI cable
266.5–19x1(3)
ecranat/screened
267.5–16x1(4)
ecranat/screened
268.5–4x10
ecranat/screened
④
Y-5AD
612–4x2,5(0)
25m
BJ
BL18
262.5.1–16x
BL19
1/2
1x4x0,8–10m
autostop/ INDUSI cable
BL19
0,5
1x4x0,8–275m
autostop/ INDUSI cable
261.5–19x1(3)
ecranat/screened
262.5–16x1(4)
ecranat/screened
263.5–4x16
ecranat/screened
②
YF-5AD
612–4x2,5(0)
25m
BJ

Statia: Cata

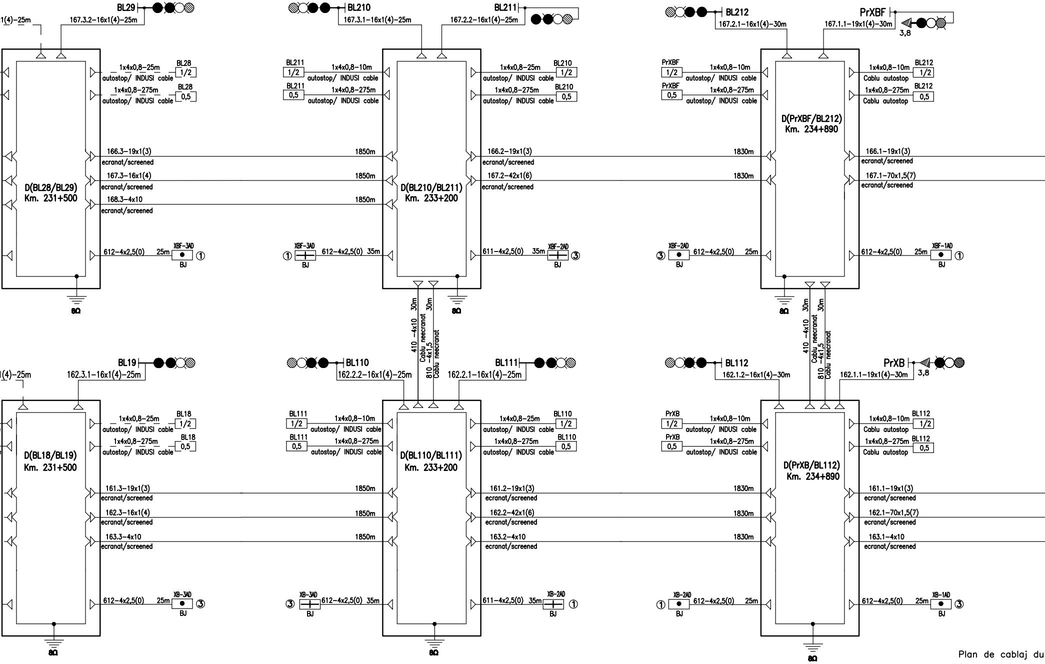
BL29
1(4)-25m
167.3.2-16x1(4)-25m
BL210
167.3.1-16x1(4)-25m
BL211
167.2.2-16x1(4)-25m
BL212
167.2.1-16x1(4)-30m
PrXBF
167.1.1-19x1(4)-30m
3,8
1x4x0,8-25m
autostop/ INDUSI cable
BL28
1/2
1x4x0,8-275m
autostop/ INDUSI cable
BL28
0,5
BL211
1/2
1x4x0,8-10m
autostop/ INDUSI cable
BL211
0,5
1x4x0,8-275m
autostop/ INDUSI cable
1x4x0,8-25m
autostop/ INDUSI cable
BL210
1/2
1x4x0,8-275m
autostop/ INDUSI cable
BL210
0,5
PrXBF
1/2
1x4x0,8-10m
autostop/ INDUSI cable
PrXBF
0,5
1x4x0,8-275m
autostop/ INDUSI cable
1x4x0,8-10m
Cablu autostop
BL212
1/2
1x4x0,8-275m
Cablu autostop
BL212
0,5
D(PrXBF/BL212)
Km. 234+890
166.3-19x1(3)
ecranat/screened
1850m
167.3-16x1(4)
ecranat/screened
1850m
D(BL28/BL29)
Km. 231+500
168.3-4x10
ecranat/screened
1850m
166.2-19x1(3)
ecranat/screened
1830m
167.2-42x1(6)
ecranat/screened
1830m
D(BL210/BL211)
Km. 233+200
166.1-19x1(3)
ecranat/screened
167.1-70x1,5(7)
ecranat/screened
612-4x2,5(0)
25m
XBF-3AD
BJ
①
①
XBF-3AD
BJ
612-4x2,5(0)
35m
611-4x2,5(0)
35m
XBF-2AD
BJ
③
③
XBF-2AD
BJ
612-4x2,5(0)
25m
612-4x2,5(0)
25m
XBF-1AD
BJ
①
8Ω
8Ω
8Ω
30m
30m
410 -4x10
Cablu neecranat
810 -4x1,5
Cablu neecranat
30m
30m
410 -4x10
Cablu neecranat
810 -4x1,5
Cablu neecranat
BL19
1(4)-25m
162.3.1-16x1(4)-25m
BL110
162.2.2-16x1(4)-25m
BL111
162.2.1-16x1(4)-25m
BL112
162.1.2-16x1(4)-30m
PrXB
162.1.1-19x1(4)-30m
3,8
1x4x0,8-25m
autostop/ INDUSI cable
BL18
1/2
1x4x0,8-275m
autostop/ INDUSI cable
BL18
0,5
D(BL18/BL19)
Km. 231+500
BL111
1/2
1x4x0,8-10m
autostop/ INDUSI cable
BL111
0,5
1x4x0,8-275m
autostop/ INDUSI cable
D(BL110/BL111)
Km. 233+200
1x4x0,8-25m
autostop/ INDUSI cable
BL110
1/2
1x4x0,8-275m
autostop/ INDUSI cable
BL110
0,5
PrXB
1/2
1x4x0,8-10m
autostop/ INDUSI cable
PrXB
0,5
1x4x0,8-275m
autostop/ INDUSI cable
D(PrXB/BL112)
Km. 234+890
1x4x0,8-10m
Cablu autostop
BL112
1/2
1x4x0,8-275m
Cablu autostop
BL112
0,5
161.3-19x1(3)
ecranat/screened
1850m
162.3-16x1(4)
ecranat/screened
1850m
163.3-4x10
ecranat/screened
1850m
161.2-19x1(3)
ecranat/screened
1830m
162.2-42x1(6)
ecranat/screened
1830m
163.2-4x10
ecranat/screened
1830m
161.1-19x1(3)
ecranat/screened
162.1-70x1,5(7)
ecranat/screened
163.1-4x10
ecranat/screened
612-4x2,5(0)
25m
XB-3AD
BJ
③
③
XB-3AD
BJ
612-4x2,5(0)
35m
611-4x2,5(0)
35m
XB-2AD
BJ
①
①
XB-2AD
BJ
612-4x2,5(0)
25m
612-4x2,5(0)
25m
XB-1AD
BJ
③
8Ω
8Ω
8Ω

Plan de cablaj du
Cable lay-out for

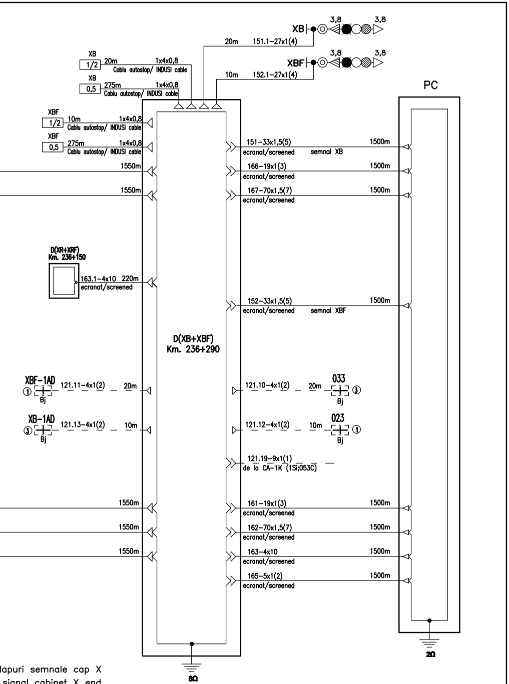
XB
3,8
3,8
XBF
3,8
3,8
20m
151.1–27x1(4)
10m
152.1–27x1(4)
XB
1/2
20m
1x4x0,8
Cablu autostop/ INDUSI cable
XB
0,5
275m
1x4x0,8
Cablu autostop/ INDUSI cable
XBF
1/2
10m
1x4x0,8
Cablu autostop/ INDUSI cable
XBF
0,5
275m
1x4x0,8
Cablu autostop/ INDUSI cable
1550m
1550m
PC
151–33x1,5(5)
ecranat/screened
semnal XB
1500m
166–19x1(3)
ecranat/screened
1500m
167–70x1,5(7)
ecranat/screened
1500m
D(XR+XRF)
Km. 236+150
163.1–4x10
220m
ecranat/screened
152–33x1,5(5)
ecranat/screened
semnal XBF
1500m
D(XB+XBF)
Km. 236+290
XBF–1AD
①
Bj
121.11–4x1(2)
20m
121.10–4x1(2)
20m
033
Bj
③
XB–1AD
③
Bj
121.13–4x1(2)
10m
121.12–4x1(2)
10m
023
Bj
①
121.19–9x1(1)
de la CA–1K (1Si;053C)
1550m
161–19x1(3)
ecranat/screened
1500m
1550m
162–70x1,5(7)
ecranat/screened
1500m
1550m
163–4x10
ecranat/screened
1500m
165–5x1(2)
ecranat/screened
1500m
8Ω
2Ω
8Ω

lapuri semnale cap X
signal cabinet X end

EA51 01 C 13 UX SE 013 2 012 2 03/04

(740x297)

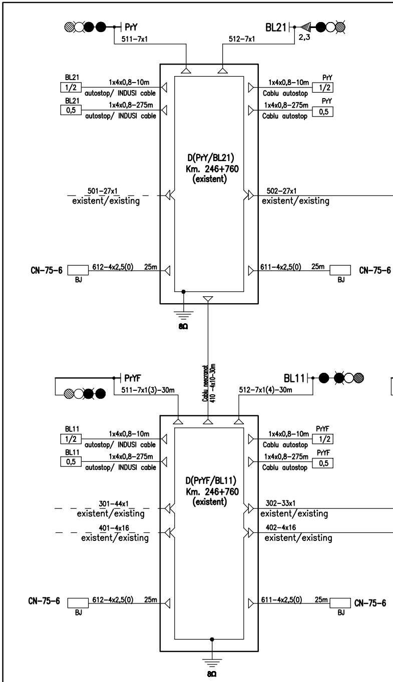
PrY
511–7x1
BL21
2,3
512–7x1
BL21
1/2
1x4x0,8–10m
autostop/ INDUSI cable
BL21
0,5
1x4x0,8–275m
autostop/ INDUSI cable
1x4x0,8–10m
Cablu autostop
PrY
1/2
1x4x0,8–275m
Cablu autostop
PrY
0,5
D(PrY/BL21)
Km. 246+760
(existent)
501–27x1
existent/existing
502–27x1
existent/existing
CN–75–6
BJ
612–4x2,5(0)
25m
611–4x2,5(0)
25m
BJ
CN–75–6
8Ω
Cablu neecranat
410 –4x10–30m
PrYF
511–7x1(3)–30m
BL11
512–7x1(4)–30m
BL11
1/2
1x4x0,8–10m
autostop/ INDUSI cable
BL11
0,5
1x4x0,8–275m
autostop/ INDUSI cable
1x4x0,8–10m
Cablu autostop
PrYF
1/2
1x4x0,8–275m
Cablu autostop
PrYF
0,5
D(PrYF/BL11)
Km. 246+760
(existent)
301–44x1
existent/existing
302–33x1
existent/existing
401–4x16
existent/existing
402–4x16
existent/existing
CN–75–6
BJ
612–4x2,5(0)
25m
611–4x2,5(0)
25m
BJ
CN–75–6
8Ω

Statia: Cata

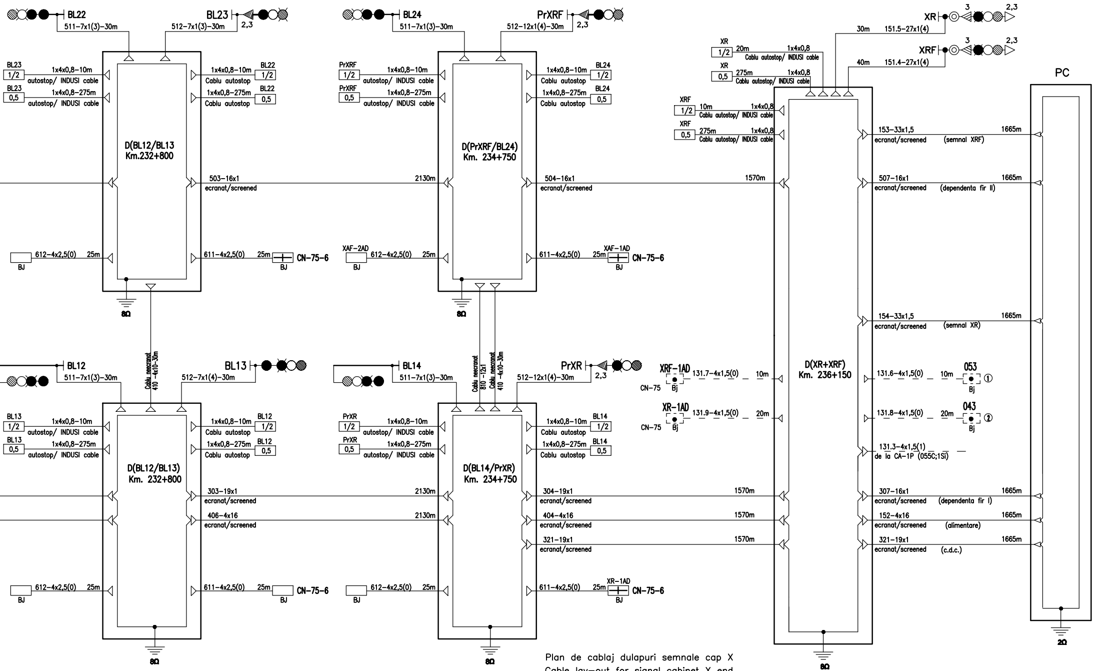
BL22
511–7x1(3)–30m
BL23
512–7x1(3)–30m
2,3
BL24
511–7x1(3)–30m
PrXRF
512–12x1(4)–30m
2,3
XR
3
2,3
30m 151.5–27x1(4)
XRF
3
2,3
40m 151.4–27x1(4)
XR 1/2 20m 1x4x0,8 Cablu autostop/ INDUSI cable
XR 0,5 275m 1x4x0,8 Cablu autostop/ INDUSI cable
PC
BL23 1/2 1x4x0,8–10m autostop/ INDUSI cable
BL23 0,5 1x4x0,8–275m autostop/ INDUSI cable
1x4x0,8–10m Cablu autostop BL22 1/2
1x4x0,8–275m Cablu autostop BL22 0,5
D(BL12/BL13)
Km.232+800
503–16x1 ecranat/screened
2130m
BJ 612–4x2,5(0) 25m
611–4x2,5(0) 25m BJ CN–75–6
8Ω
PrXRF 1/2 1x4x0,8–10m autostop/ INDUSI cable
PrXRF 0,5 1x4x0,8–275m autostop/ INDUSI cable
1x4x0,8–10m Cablu autostop BL24 1/2
1x4x0,8–275m Cablu autostop BL24 0,5
D(PrXRF/BL24)
Km. 234+750
504–16x1 ecranat/screened
1570m
XAF–2AD BJ 612–4x2,5(0) 25m
611–4x2,5(0) 25m XAF–1AD BJ CN–75–6
8Ω
XRF 1/2 10m 1x4x0,8 Cablu autostop/ INDUSI cable
XRF 0,5 275m 1x4x0,8 Cablu autostop/ INDUSI cable
D(XR+XRF)
Km. 236+150
153–33x1,5 1665m ecranat/screened (semnal XRF)
507–16x1 1665m ecranat/screened (dependenta fir II)
154–33x1,5 1665m ecranat/screened (semnal XR)
XRF–1AD CN–75 Bj 131.7–4x1,5(0) 10m
XR–1AD CN–75 Bj 131.9–4x1,5(0) 20m
131.6–4x1,5(0) 10m 053 Bj ①
131.8–4x1,5(0) 20m 043 Bj ②
131.3–4x1,5(1) de la CA–1P (055C;1Si)
307–16x1 1665m ecranat/screened (dependenta fir I)
152–4x16 1665m ecranat/screened (alimentare)
321–19x1 1665m ecranat/screened (c.d.c.)
8Ω
2Ω
Cablu neecranat 410 –4x10–30m
BL12
511–7x1(3)–30m
BL13
512–7x1(4)–30m
BL14
511–7x1(3)–30m
Cablu neecranat 810 –12x1
Cablu neecranat 410 –4x10–30m
PrXR
512–12x1(4)–30m
2,3
BL13 1/2 1x4x0,8–10m autostop/ INDUSI cable
BL13 0,5 1x4x0,8–275m autostop/ INDUSI cable
1x4x0,8–10m Cablu autostop BL12 1/2
1x4x0,8–275m Cablu autostop BL12 0,5
D(BL12/BL13)
Km. 232+800
303–19x1 ecranat/screened 2130m
406–4x16 ecranat/screened 2130m
BJ 612–4x2,5(0) 25m
611–4x2,5(0) 25m BJ CN–75–6
8Ω
PrXR 1/2 1x4x0,8–10m autostop/ INDUSI cable
PrXR 0,5 1x4x0,8–275m autostop/ INDUSI cable
1x4x0,8–10m Cablu autostop BL14 1/2
1x4x0,8–275m Cablu autostop BL14 0,5
D(BL14/PrXR)
Km. 234+750
304–19x1 ecranat/screened 1570m
404–4x16 ecranat/screened 1570m
321–19x1 ecranat/screened 1570m
BJ 612–4x2,5(0) 25m
611–4x2,5(0) 25m XR–1AD BJ CN–75–6
8Ω

Plan de cablaj dulapuri semnale cap X
Cable lay–out for signal cabinet X end

EA51 01 C 13 UX SE 013 2 012 2 04/04
(660x297)