NOTA: Acest desen nu constituie o obligatie de aplicare de către contractor.
El reprezintă doar un exemplu de circuit de cale utilizat la CFR si nu trebuie aplicat ca atare.

NOTE: It is not compulsory for the contractor to apply this drawing.
It is only an example of track circuit in use at CFR and shall not be applied as such.

Indice Index	Data Date	Modificare Modification/Revision	Proiectant Designer	Aprobat Consultant Approved Consultant	Aprobat CFR Approved CFR
D					
C					
B					
A					

GUVERNUL ROMANIEI
ROMANIAN GOVERNMENT

PROIECT FINANŢAT DE UNIUNEA EUROPEANĂ
EUROPEAN UNION FINANCED PROJECT

CLIENT / CLIENT

C.N.C.F. "C.F.R." - S.A.

ITALFERR
GRUPPO FERROVIE DELLO STATO
Joint Venture leader

Scott Wilson

OBERMEYER
PLANEN + BERATEN GmbH

TECNIC
Consulting Engineers

CONSULTANT / CONSULTANT

			Data Date	Semnătură Signature
Aprobat Approved	Şef proiect Project manager	R. Liuzza	12.2011	
Aprobat Approved	Coordonator Secţiune 1 Section 1 Coordinator	C. Gambelli	12.2011	
Verificat Checked	Expert Cheie Key Expert	P. Amodio	12.2011	

SUBCONTRACTANT / SUBCONTRACTOR

AREX COMPANY

Aprobat Approved	Responsabil Subconsultant Subconsultant Responsible	A. Stanciu - Dinulescu	12.2011	
Întocmit Elaborated	Proiectant Designer	Angelescu Sergiu	12.2011	

Reabilitarea liniei de cale ferata Braşov - Simeria, parte componentă a coridorului IV Pan European, pentru circulaţia trenurilor cu viteza maximă de 160 km/h,
Tronsonul : Braşov - Sighişoara
Rehabilitation of the railway line Braşov - Simeria, component Part of the IV Pan-European Corridor, for the trains circulation with maximum speed of 160 km/h,
Section : Braşov - Sighişoara

Proiect/Project
2004/RO/16/P/PA/003

Faza / Phase:
D.E. / D.D.

Denumire desen / Drawing Title :

Statia / Station ARCHITA
Fise de montaj rama alimentare in secvente circuite de cale
Wiring diagrams for track circuits sequence-supply frame

Codificare / Codification System	Scara / Scale Fără / No scale	LOT / LOT	Nr. / No 01 / 10

E A 5 1 | 0 1 | E | 1 5 | B X | S E | 0 1 | 5 | 2 | 0 1 2 | 1

	1	2	3	4	5	6
8		NF1L–400 ASA4 A1	NF1L–400 ASA4 A3	NF1L–400 ASA4 A5	NF1L–400 ASA4 A7	NF1L–400 ASA4 A2
7		NF1–2000 ASA5 VS1–3	NF1–2000 VS1–4	NF1–2000 ASA5 VS2–4	NF1–2000 VS2–1	NF1–2000 ASA5 VS3–1
6	2x0,5A	VS1B–CI	VS1B–BD	VS2B–CI	VS2B–BD	VS3B–CI
5	4x0,5A	VS1A–CI	VS1A–BD	VS2A–CI	VS2A–BD	VS3A–CI

	1	2	3	4	5
4				GENERATOR IMPULSURI DE SINCRONIZARE Y2–4	
3		CONTACTOR STATIC CS–3X			
2		CONTACTOR STATIC CS–1X		EMITATOR CENTRAL	
1				GENERATOR IMPULSURI DE SINCRONIZARE X1–3	

	1	2	3	4	5	6
0	4x0,5A Sincronizare BLA–X (S1,S3)	2x5A Alim.contactori 2x0,5A Alim. emitator	4x0,5A Sincronizare BLA–Y (S2,S4)	2x5A Alim. rame	4x0,5A Comanda secvente (S1,S2)	4x0,5A Comanda secvente (S3,S4)

Statia ARCHITA

7	8	9
NF1L–400 ASA4 A4	NF1L–400 ASA4 A6	NF1L–400 ASA4 A8
NF1–2000 VS3–2	NF1–2000 ASA5 VS4–2	NF1–2000 VS4–3
VS3B–BD	VS4B–CI	VS4B–BD
VS3A–BD	VS4A–CI	VS4A–BD

	6	7
	CONTACTOR STATIC CS–4Y	
	CONTACTOR STATIC CS–2Y	

7	8	9
4x0,5A Sincronizare STATIE (S1, S2, S3, S4)	4x5A SECV. X	4x5A SECV. Y

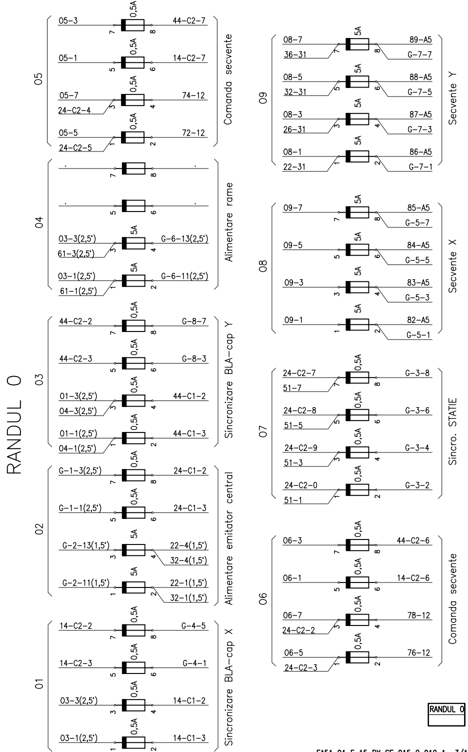
RANDUL 0
05
05–3 0,5A 7 8 44–C2–7
05–1 0,5A 5 6 14–C2–7
05–7 24–C2–4 0,5A 3 4 74–12
05–5 24–C2–5 0,5A 1 2 72–12
Comanda secvente
04
. 7 8 .
. 5 6 .
03–3(2,5') 61–3(2,5') 5A 3 4 G–6–13(2,5')
03–1(2,5') 61–1(2,5') 5A 1 2 G–6–11(2,5')
Alimentare rame
03
44–C2–2 0,5A 7 8 G–8–7
44–C2–3 0,5A 5 6 G–8–3
01–3(2,5') 04–3(2,5') 0,5A 3 4 44–C1–2
01–1(2,5') 04–1(2,5') 0,5A 1 2 44–C1–3
Sincronizare BLA–cap Y
02
G–1–3(2,5') 0,5A 7 8 24–C1–2
G–1–1(2,5') 0,5A 5 6 24–C1–3
G–2–13(1,5') 5A 3 4 22–4(1,5') 32–4(1,5')
G–2–11(1,5') 5A 1 2 22–1(1,5') 32–1(1,5')
Alimentare emitator central
01
14–C2–2 0,5A 7 8 G–4–5
14–C2–3 0,5A 5 6 G–4–1
03–3(2,5') 0,5A 3 4 14–C1–2
03–1(2,5') 0,5A 1 2 14–C1–3
Sincronizare BLA–cap X
09
08–7 36–31 5A 7 8 89–A5 G–7–7
08–5 32–31 5A 5 6 88–A5 G–7–5
08–3 26–31 5A 3 4 87–A5 G–7–3
08–1 22–31 5A 1 2 86–A5 G–7–1
Secvente Y
08
09–7 5A 7 8 85–A5 G–5–7
09–5 5A 5 6 84–A5 G–5–5
09–3 5A 3 4 83–A5 G–5–3
09–1 5A 1 2 82–A5 G–5–1
Secvente X
07
24–C2–7 51–7 0,5A 7 8 G–3–8
24–C2–8 51–5 0,5A 5 6 G–3–6
24–C2–9 51–3 0,5A 3 4 G–3–4
24–C2–0 51–1 0,5A 1 2 G–3–2
Sincro. STATIE
06
06–3 0,5A 7 8 44–C2–6
06–1 0,5A 5 6 14–C2–6
06–7 24–C2–2 0,5A 3 4 78–12
06–5 24–C2–3 0,5A 1 2 76–12
Comanda secvente
RANDUL 0

Statia ARCHITA

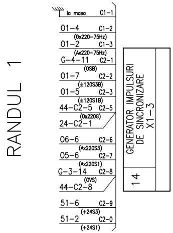
RANDUL 1
la masa C1–1
01–4 C1–2
(0x220–75Hz)
01–2 C1–3
(Ax220–75Hz)
G–4–11 C2–1
(0SB)
01–7 C2–2
(±120S3B)
01–5 C2–3
(±120S1B)
44–C2–5 C2–5
(0x220G)
24–C2–1
06–6 C2–6
(Ax220S3)
05–6 C2–7
(Ax220S1)
G–3–14 C2–8
(0VS)
44–C2–8
51–6 C2–9
(+24S3)
51–2 C2–0
(+24S1)
GENERATOR IMPULSURI DE SINCRONIZARE X1–3
14

Statia ARCHITA

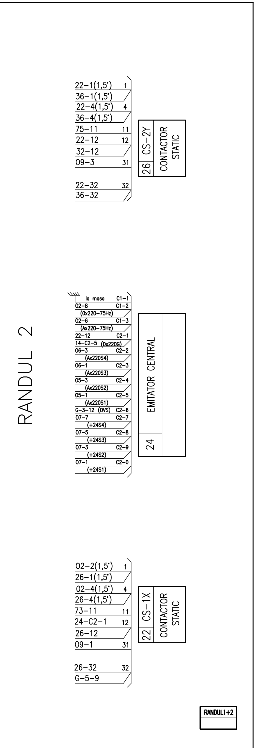
22-1(1,5') 1
36-1(1,5')
22-4(1,5') 4
36-4(1,5')
75-11 11
22-12 12
32-12
09-3 31
22-32 32
36-32
26 CS-2Y
CONTACTOR STATIC
RANDUL 2
la masa C1-1
02-8 C1-2
(0x220-75Hz)
02-6 C1-3
(Ax220-75Hz)
22-12 C2-1
14-C2-5 (0x220G)
06-3 C2-2
(Ax220S4)
06-1 C2-3
(Ax220S3)
05-3 C2-4
(Ax220S2)
05-1 C2-5
(Ax220S1)
G-3-12 (OVS) C2-6
07-7 C2-7
(+24S4)
07-5 C2-8
(+24S3)
07-3 C2-9
(+24S2)
07-1 C2-0
(+24S1)
EMITATOR CENTRAL
24
02-2(1,5') 1
26-1(1,5')
02-4(1,5') 4
26-4(1,5')
73-11 11
24-C2-1 12
26-12
09-1 31
26-32 32
G-5-9
22 CS-1X
CONTACTOR STATIC
RANDUL1+2

EA51 01 E 15 BX SE 015 2 012 1 4/10

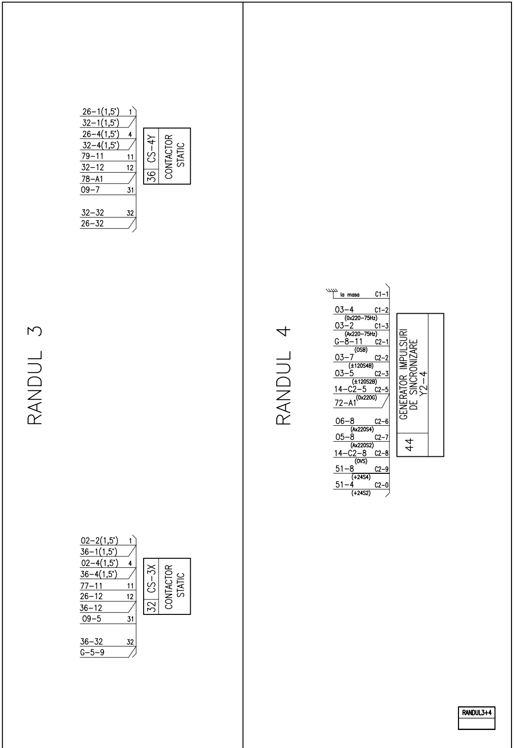
RANDUL 3
26-1(1,5') 1
32-1(1,5')
26-4(1,5') 4
32-4(1,5')
79-11 11
32-12 12
78-A1
09-7 31
32-32 32
26-32
36 CS-4Y
CONTACTOR STATIC
02-2(1,5') 1
36-1(1,5')
02-4(1,5') 4
36-4(1,5')
77-11 11
26-12 12
36-12
09-5 31
36-32 32
G-5-9
32 CS-3X
CONTACTOR STATIC
RANDUL 4
la masa C1-1
03-4 C1-2
(0x220-75Hz)
03-2 C1-3
(Ax220-75Hz)
G-8-11 C2-1
(OSB)
03-7 C2-2
(±120S4B)
03-5 C2-3
(±120S2B)
14-C2-5 C2-5
(0x220G)
72-A1
06-8 C2-6
(Ax220S4)
05-8 C2-7
(Ax220S2)
14-C2-8 C2-8
(OVS)
51-8 C2-9
(+24S4)
51-4 C2-0
(+24S2)
GENERATOR IMPULSURI DE SINCRONIZARE Y2-4
44
RANDUL3+4

Statia ARCHITA

EA51 01 E 15 BX SE 015 2 012 1 5/10

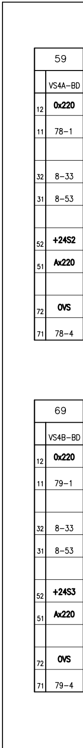
59
VS4A-BD
12 0x220
11 78-1
32 8-33
31 8-53
52 +24S2
51 Ax220
72 OVS
71 78-4
69
VS4B-BD
12 0x220
11 79-1
32 8-33
31 8-53
52 +24S3
51 Ax220
72 OVS
71 79-4

Statia ARCHITA

RANDUL 5

58		57		56		55		54		53		52		51	
	VS4A-CI		VS3A-BD		VS3A-CI		VS2A-BD		VS2A-CI		VS1A-BD		VS1A-CI		4x0,5A
		12	**0x220**			12	**0x220**			12	**0x220**			1 0,5A	07-1
11	68-11	11	76-1	11	66-11	11	74-1	11	64-11	11	72-1	11	62-11	2	14-C2-0
13	**OVS**			13	**OVS**			13	**OVS**			13	**OVS**	3 0,5A	07-3
		32	6-33			32	4-33			32	2-33			4	44-C2-0
		31	6-53			31	4-53			31	2-53			5 0,5A	07-5
33	9-32			33	7-32			33	5-32			33	3-32	6	14-C2-9
		52	**+24S1**			52	**+24S4**			52	**+24S3**			7 0,5A	07-7
		51	**Ax220**			51	**Ax220**			51	**Ax220**			8	44-C2-9
53	9-31			53	7-31			53	5-31			53	3-31		
		72	**OVS**			72	**OVS**			72	**OVS**				
71	68-71	71	76-4	71	66-71	71	74-4	71	64-71	71	72-4	71	62-71		

RANDUL 6

68		67		66		65		64		63		62		61	
	VS4B-CI		VS3B-BD		VS3B-CI		VS2B-BD		VS2B-CI		VS1B-BD		VS1B-CI		2x0,5A
		12	**0x220**			12	**0x220**			12	**0x220**			1 0,5A	04-1(2,5') G-1-1(2,5')
11	58-11 78-A12	11	77-1	11	56-11 76-A12	11	75-1	11	54-11 74-A12	11	73-1	11	52-11 72-A12	2	53-51 63-51
13	**OVS**			13	**OVS**			13	**OVS**			13	**OVS**	3 0,5A	04-3(2,5') G-1-3(2,5')
		32	6-33			32	4-33			32	2-33			4	53-12 63-12
		31	6-53			31	4-53			31	2-53				
33	9-32			33	7-32			33	5-32			33	3-32		
		52	**+24S2**			52	**+24S1**			52	**+24S4**				
		51	**Ax220**			51	**Ax220**			51	**Ax220**				
53	9-31			53	7-31			53	5-31			53	3-31		
		72	**OVS**			72	**OVS**			72	**OVS**				
71	58-71 78-A11	71	77-4	71	56-71 76-A11	71	75-4	71	54-71 74-A11	71	73-4	71	52-71 72-A11		

RANDUL5+6

RANDUL 7

	9		8		7		6		5		4		3		2		1
Nr. crt.	VS4-3	Nr. crt.	VS4-2	Nr. crt.	VS3-2	Nr. crt.	VS3-1	Nr. crt.	VS2-1	Nr. crt.	VS2-4	Nr. crt.	VS1-4	Nr. crt.	VS1-3	Nr. crt.	
1	69-11	1	59-11	1	67-11	1	57-11	1	65-11	1	55-11	1	63-11	1	53-11		
2	3	2	3	2	3	2	3	2	3	2	3	2	3	2	3		
3	2	3	2	3	2	3	2	3	2	3	2	3	2	3	2		
4	69-71	4	59-71	4	67-71	4	57-71	4	65-71	4	55-71	4	63-71	4	53-71		
12	8-11	12	A3 06-4	12	6-11	12	A3 06-2	12	4-11	12	A3 05-4	12	2-11	12	A3 05-2		
11	36-11	11	9-12	11	32-11	11	7-12	11	26-11	11	5-12	11	22-11	11	3-12		
13		13		13		13		13		13		13		13			
22		22		22		22		22		22		22		22			
21		21		21		21		21		21		21		21			
23		23		23		23		23		23		23		23			
32		32		32		32		32		32		32		32			
31		31		31		31		31		31		31		31			
33		33		33		33		33		33		33		33			
42		42		42		42		42		42		42		42			
41		41		41		41		41		41		41		41			
43		43		43		43		43		43		43		43			
52		52		52		52		52		52		52		52			
51		51		51		51		51		51		51		51			
53		53		53		53		53		53		53		53			
62		62		62		62		62		62		62		62			
61		61		61				61		61		61		61			
63		63		63		63		63		63		63		63			
72		72		72		72		72		72		72		72			
71		71		71		71		71		71		71		71			
73		73		73		73		73		73		73		73			
82		82		82		82		82		82		82		82			
81		81		81		81		81		81		81		81			
83		83		83		83		83		83		83		83			
		A1	6-A1 36-12			A1	4-A1 8-A1			A1	2-A1 6-A1			A1	4-A1 44-C2-5		
		A3	12			A3	12			A3	12			A3	12		
		A11	68-71			A11	66-71			A11	64-71			A11	62-71		
		A12	68-11			A12	66-11			A12	64-11			A12	62-11		

RANDUL 7

Statia ARCHITA

RANDUL 8

9		8		7		6		5		4		3		2		1	
Nr. crt.	A8	Nr. crt.	A6	Nr. crt.	A4	Nr. crt.	A2	Nr. crt.	A7	Nr. crt.	A5	Nr. crt.	A3	Nr. crt.	A1	Nr. crt.	
1	A13	1	A13	1	A13	1	A13	1	A13	1	A13	1	A13	1	A13		
2	3	2	3	2	3	2	3	2	3	2	3	2	3	2	3		
3	2	3	2	3	2	3	2	3	2	3	2	3	2	3	2		
4	A12	4	A12	4	A12	4	A12	4	A12	4	A12	4	A12	4	A12		
12		12		12		12		12		12		12		12			
11		11		11		11		11		11		11		11			
13		13		13		13		13		13		13		13			
22	G-10-14	22	9-21	22	8-21	22	7-21	22	6-21	22	5-21	22	4-21	22	3-21		
21	8-22	21	7-22	21	6-22	21	5-22	21	4-22	21	3-22	21	2-22	21	G-10-12		
23		23		23		23		23		23		23		23			
32	G-10-5	32	9-31	32	8-31	32	7-31	32	G-10-3	32	5-31	32	4-31	32	3-31		
31	8-32	31	7-32	31	6-32	31	2-31	31	4-32	31	3-32	31	2-32	31	6-31 G-10-1		
33		33		33		33		33		33		33		33			
42		42		42		42		42		42		42		42			
41		41		41		41		41		41		41		41			
43		43		43		43		43		43		43		43			
52		52		52		52		52		52		52		52			
51		51		51		51		51		51		51		51			
53		53		53		53		53		53		53		53			
62		62		62		62		62		62		62		62			
61		61		61		61		61		61		61		61			
63		63		63		63		63		63		63		63			
72		72		72		72		72		72		72		72			
71		71		71		71		71		71		71		71			
73		73		73		73		73		73		73		73			
82		82		82		82		82		82		82		82			
81		81		81		81		81		81		81		81			
83		83		83		83		83		83		83		83			
A1	8-A1	A1	7-A1 9-A1	A1	6-A1 8-A1	A1	5-A1 7-A1	A1	4-A1 6-A1	A1	3-A1 5-A1	A1	2-A1 4-A1	A1	3-A1 G-7-9		
A5	09-8	A5	09-6	A5	09-4	A5	09-2	A5	08-8	A5	08-6	A5	08-4	A5	08-2		
(+) A12	4	(+) A12	4	(+) A12	4	(+) A12	4	(+) A12	4	(+) A12	4	(+) A12	4	(+) A12	4		
(-) A13	1	(-) A13	1	(-) A13	1	(-) A13	1	(-) A13	1	(-) A13	1	(-) A13	1	(-) A13	1		
A8	A10	A8	A10	A8	A10	A8	A10	A8	A10	A8	A10	A8	A10	A8	A10		
A9	A11	A9	A11	A9	A11	A9	A11	A9	A11	A9	A11	A9	A11	A9	A11		

RANDUL 8

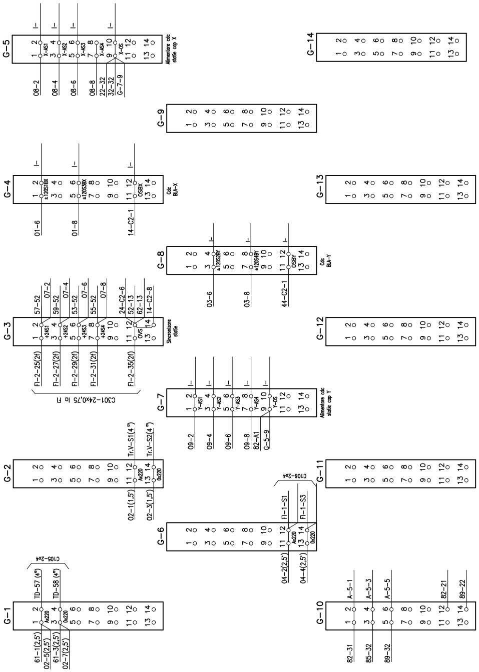
G-5
X-AS1
X-AS2
X-AS3
X-AS4
X-OS
Alimentare cdc statie cap X
08-2
08-4
08-6
08-8
22-32
32-32
G-7-9
G-14
G-9
G-4
±120S1BX
±120S3BX
OSBX
Cdc BLA-X
01-6
01-8
14-C2-1
G-13
G-8
±120S2BY
±120S4BY
OSBY
Cdc BLA-Y
03-6
03-8
44-C2-1
G-3
57-52
07-2
59-52
07-4
53-52
07-6
55-52
07-8
24-C2-6
52-13
62-13
14-C2-8
+24S1
+24S2
+24S3
+24S4
OVS
Sincronizare statie
FI-2-25(2f)
FI-2-27(2f)
FI-2-29(2f)
FI-2-31(2f)
FI-2-35(2f)
C301-24x0,75 la FI
G-12
G-7
Y-AS1
Y-AS2
Y-AS3
Y-AS4
Y-OS
Alimentare cdc statie cap Y
09-2
09-4
09-6
09-8
82-A1
G-5-9
G-2
Tr.V-S1(4")
Tr.V-S2(4")
Ax220
0x220
02-1(1,5')
02-3(1,5')
G-11
C106-2x4
FI-1-S1
FI-1-S3
G-6
04-2(2,5')
04-4(2,5')
C105-2x4
TD-57 (4")
TD-58 (4")
G-1
61-1(2,5')
02-5(2,5')
61-3(2,5')
02-7(2,5')
G-10
A-5-1
A-5-3
A-5-5
82-21
89-22
82-31
85-32
89-32

BUCLE TENSIUNI

0VS	+24S1	+24S2	+24S3	+24S4	Ax220	0x220	0S	0S	0x220G
G-3-12	G-3-2	G-3-4	G-3-6	G-3-8	61-2	61-4	G-5-9	G-7-9	24-C2-1
52-13	57-52	59-52	53-52	55-52	53-51	53-12	22-32	89-A1	22-12
53-72	65-52	67-52	69-52	63-52	55-51	55-12	26-32	88-A1	26-12
54-13					57-51	57-12	36-32	87-A1	32-12
55-72					59-51	59-12	32-32	86-A1	36-12
56-13					69-51	69-12		85-A1	78-A1
57-72					67-51	67-12		84-A1	76-A1
58-13					65-51	65-12		83-A1	74-A1
59-72					63-51	63-12		82-A1	72-A1
69-72									44-C2-5
68-13									14-C2-5
67-72									
66-13									
65-72									
64-13									
63-72									
62-13									
G-3-12						61-2	61-4	G-5-9	G-7-9	24-C2-1