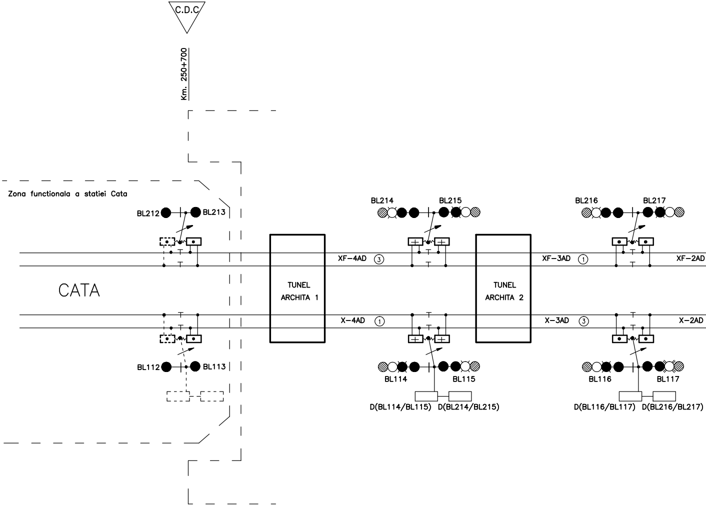
C.D.C
Km. 250+700
Zona functionala a statiei Cata
CATA
BL212
BL213
BL112
BL113
TUNEL
ARCHITA 1
XF-4AD
③
X-4AD
①
BL214
BL215
BL114
BL115
D(BL114/BL115)
D(BL214/BL215)
TUNEL
ARCHITA 2
XF-3AD
①
X-3AD
③
BL216
BL217
BL116
BL117
D(BL116/BL117)
D(BL216/BL217)
XF-2AD
X-2AD

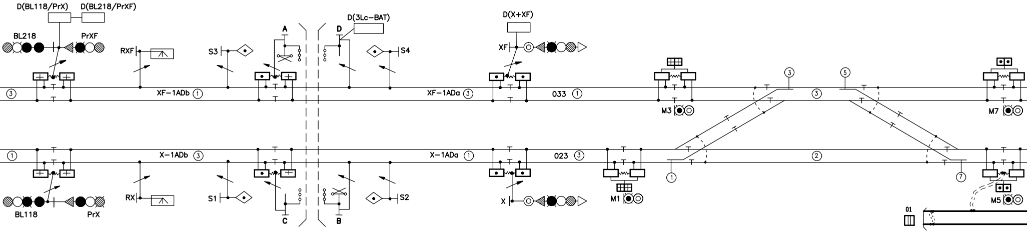
D(BL118/PrX)
D(BL218/PrXF)
BL218
PrXF
RXF
S3
A
D
D(3Lc–BAT)
S4
D(X+XF)
XF
③
⑤
③
XF–1ADb ①
XF–1ADa ③
033 ①
③
M3
M7
①
X–1ADb ③
X–1ADa ①
023 ③
②
①
⑦
M1
M5
01
RX
S1
C
B
S2
X
BL118
PrX

NOTA: Semnalele repetitoare RYIII si RXII
sunt sub copertina fiind suspendate de aceasta.

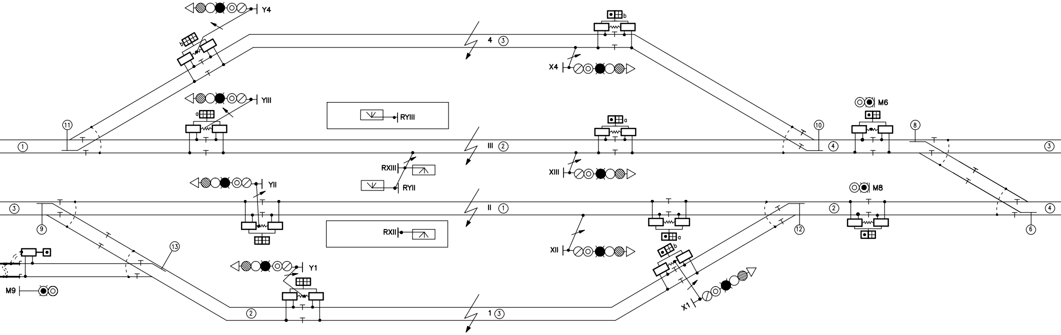
Y4
b
4 ③
b
X4
YIII
a
RYIII
a
M6
⑪
①
III ②
⑩
④
⑧
③
RXIII
XIII
YII
RYII
M8
③
II ①
②
④
⑨
RXII
a
⑫
⑥
XII
b
⑬
M9
Y1
X1
②
1 ③

LEGENDA–SYMBOLS

Circuit de cale monofilar
Single wire track circuit

Circuit de cale bifilar
Double wire track circuit

Macaz simplu (sectiune izolată de macaz)
Single switch (insulated switch section)

Legătură de protectie (eclator)
Protection connection (arrester)

Funie de cupru de 50 mmp
Copper cord 50 mmp

D(X+XF) Dulap semnal
Signal cabinet

⊗ Opritor
Dead end

Semnal de circulatie pe catarg
Main signal on mast

Semnal de manevră pe catarg
Shunting signal on mast

Semnal de manevră pitic
Shunting signal on ground

Semnal de avertizare rutieră cu semibarieră BAT
Stop signal with half barrier on level crossing

Joante izlolante
Insulated joints

Joante izlolante fără gabarit
Gaugeless Insulated joints

Linie electrificată
Electrified railway

Semnal de avertizare rutieră la TN
Level crossing road signal

⊞ Cutie aparataj pentru circuit de cale cap – receptie
Track circuit box – receiving end

⊡ Cutie aparataj pentru circuit de cale cap – alimentare
Track circuit box – supplying end

Cutie aparataj pentru circuite de cale – 2 capete receptie
Track circuit box – two receiving ends

Cutie aparataj pentru circuite de cale – 2 capete alimentare
Track circuit box – two supplying ends

Cutie aparataj pentru circuite de cale – 1 cap receptie, 1 cap alimentare
Track circuit box – receiving end– supplying end

⊕ Cutie de conectare pentru terminal releu
Track circuit box – receiving end

⊙ Cutie de conectare pentru terminal alimentare
Track circuit box – supplying end

Bobină de joantă
Joint coil

① ② Secventa circuitului de cale
Track circuit sequence

S Granita instalatiei de centralizare electronica
Electronic interlocking border

C.D.C SEPARARE CIRCUITE DE CALE
TRACK CIRCUITS SEPARATION

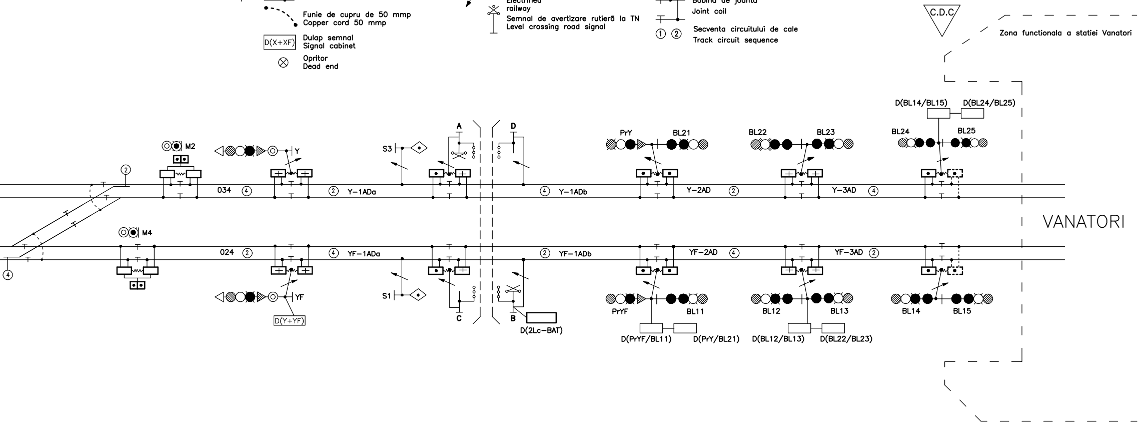
C.D.C
Zona functionala a statiei Vanatori
D(BL14/BL15)
D(BL24/BL25)
A
D
M2
Y
S3
PrY
BL21
BL22
BL23
BL24
BL25
2
034
4
2
Y–1ADa
4
Y–1ADb
Y–2AD
2
Y–3AD
4
VANATORI
M4
024
2
4
YF–1ADa
2
YF–1ADb
YF–2AD
4
YF–3AD
2
4
YF
S1
C
B
PrYF
BL11
BL12
BL13
BL14
BL15
D(Y+YF)
D(2Lc–BAT)
D(PrYF/BL11)
D(PrY/BL21)
D(BL12/BL13)
D(BL22/BL23)

D					
C					
B					
A					
Indice Index	Data Date	Modificare Modification/Revision	Proiectant Designer	Aprobat Consultant Approved Consultant	Aprobat CFR Approved CFR

GUVERNUL ROMANIEI
ROMANIAN GOVERNMENT

PROIECT FINANȚAT DE UNIUNEA EUROPEANĂ
EUROPEAN UNION FINANCED PROJECT

CFR

C.N.C.F. "C.F.R." - S.A.

CLIENT / CLIENT

ITALFERR
GRUPPO FERROVIE DELLO STATO
Joint Venture leader

Scott Wilson

OBERMEYER
PLANEN + BERATEN GmbH

TECNIC
Consulting Engineers

CONSULTANT / CONSULTANT			Data Date	Semnătură Signature
Aprobat Approved	Şef proiect Project manager	R. Liuzza	02.2012	
Aprobat Approved	Coordonator Secțiune 1 Section 1 Coordinator	C. Gambelli	02.2012	
Verificat Checked	Expert Cheie Key Expert	P. Amodio	02.2012	

SUBCONTRACTANT / SUBCONTRACTOR

AREX COMPANY

Aprobat Approved	Responsabil Subconsultant Subconsultant Responsible	A. Stanciu - Dinulescu	02.2012	
Întocmit Elaborated	Proiectant Designer	Costeanu Dan	02.2012	

Reabilitarea liniei de cale ferata Braşov - Simeria, parte componentă a coridorului IV Pan European, pentru circulația trenurilor cu viteza maximă de 160 km/h,
Tronsonul : Braşov - Sighişoara
Rehabilitation of the railway line Braşov - Simeria, component Part of the IV Pan-European Corridor, for the trains circulation with maximum speed of 160 km/h,
Section : Braşov - Sighişoara

Proiect/Project
2004/RO/16/P/PA/003

Faza / Phase:
P.Th. / T.D.

Denumire desen / Drawing Title :

Statia / Station ARCHITA
Plan bifilar de izolare
Track circuit plan

Codificare / Codification System	Scara / Scale Fără / No scale	LOT / LOT	Nr. / No 01 / 01

EA51 01 C 15 UX SE 01 5 2 003 1