LEGENDA
SYMBOLS

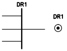

Distribuitor de cabluri
Distribution box no 1

Cap de cablu cu/fara impamantare
Cable terminal with/without earth

Legatura echipotentiala
Equipotential connection

Priza de pamant
Earth terminal

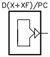

Dulap semnal/Post centralizare
Signal cabinet/Central post

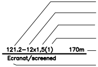
121.2–12x1,5(1)
170m
Ecranat/screened

Numarul cablului/Cable no.
Numar de conductoare/Total number of conductors in cable
Sectiunea conductorului/Conductor section
Conductor de rezerva/Spare conductor(s)
Lungimea cablului/Length of cable
Tipul cablului/Cable type

Daca tipul cablului nu este specificat acesta va fi considerat neecranat.
If the cable type is not specified it will be considered unscreened

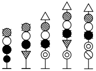

Semnal de circulatie pe catarg
Main signal on mast

Foc galben, verde, rosu, alb, albastru, indicator circulatie pe stanga
Yellow, green, red, withe, blue, traffic on left indicator lamp

Indicatoare de viteza
Speed and prespeed indicators

Semnal repetitor
Repeater signal

Semnal de manevra pe catarg
Shunting signal on ground / mast

Semibariera automata cu semnal rutier la tn
Level crossing (LC) halfbarriers with road signal

Semnal rutier la trecere la nivel
Level crossing road signal

Opritor
Dead end

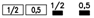

Inductor indusi 500Hz sau 1000/2000Hz
500Hz or 1000/2000Hz indusi inductor

Semnal BLA cu reper de avarie pentru TN
ABL signal with fix damage indicator for LC

Semnal avarie la TN
Warning signal for LC

Indice Index	Data Date	Modificare Modification/Revision	Proiectant Designer	Aprobat Consultant Approved Consultant	Aprobat CFR Approved CFR
D					
C					
B					
A					

GUVERNUL ROMANIEI
ROMANIAN GOVERNMENT

PROIECT FINANȚAT DE UNIUNEA EUROPEANĂ
EUROPEAN UNION FINANCED PROJECT

CLIENT / CLIENT

CFR

C.N.C.F. "C.F.R." - S.A.

ITALFERR
GRUPPO FERROVIE DELLO STATO
Joint Venture leader

Scott Wilson

OBERMEYER
PLANEN + BERATEN GmbH

TECNIC
Consulting Engineers

CONSULTANT / CONSULTANT

			Data Date	Semnătură Signature
Aprobat Approved	Șef proiect Project manager	R. Liuzza	12.2011	
Aprobat Approved	Coordonator Secțiune 1 Section 1 Coordinator	C. Gambelli	12.2011	
Verificat Checked	Expert Cheie Key Expert	P. Amodio	12.2011	

SUBCONTRACTANT / SUBCONTRACTOR

AREX COMPANY

Aprobat Approved	Responsabil Subconsultant Subconsultant Responsible	A. Stanciu - Dinulescu	12.2011	
Întocmit Elaborated	Proiectant Designer	M. Holbură	12.2011	

Reabilitarea liniei de cale ferata Brasov - Simeria, parte componentă a coridorului IV Pan European, pentru circulația trenurilor cu viteza maximă de 160 km/h,
Tronsonul : Brașov - Sighișoara
Rehabilitation of the railway line Brașov - Simeria, component Part of the IV Pan-European Corridor, for the trains circulation with maximum speed of 160 km/h,
Section : Brașov - Sighișoara

Proiect/Project
2004/RO/16/P/PA/003

Faza / Phase:
P.Th. / T.D.

Denumire desen / Drawing Title :

Statia / Station ARCHITA
Plan cablaj retele cabluri dulapuri de semnale
Cable lay-out for signal cabinet

Codificare / Codification System	Scara / Scale Fără / No scale	LOT / LOT	Nr. / No 01 / 03

E A 5 1 | 0 1 | C | 1 5 | U X | S E | 0 1 | 5 | 2 | 0 1 2 | 1

945x297=0.28mp

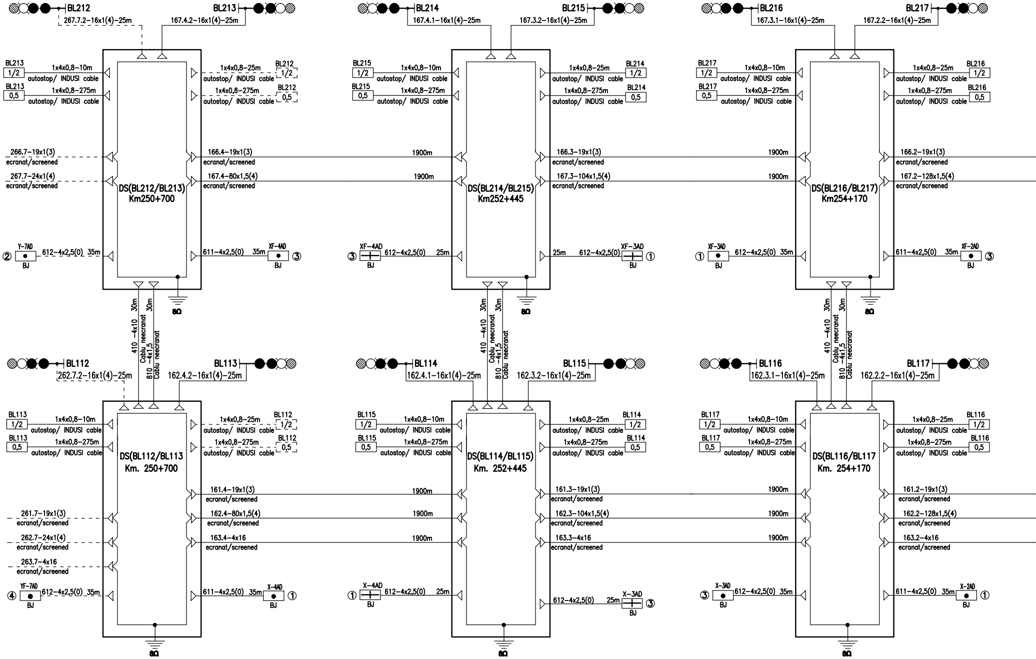
BL212
267.7.2–16x1(4)–25m
BL213
167.4.2–16x1(4)–25m
BL214
167.4.1–16x1(4)–25m
BL215
167.3.2–16x1(4)–25m
BL216
167.3.1–16x1(4)–25m
BL217
167.2.2–16x1(4)–25m
BL213 1/2 1x4x0,8–10m autostop/ INDUSI cable
BL213 0,5 1x4x0,8–275m autostop/ INDUSI cable
1x4x0,8–25m autostop/ INDUSI cable BL212 1/2
1x4x0,8–275m autostop/ INDUSI cable BL212 0,5
BL215 1/2 1x4x0,8–10m autostop/ INDUSI cable
BL215 0,5 1x4x0,8–275m autostop/ INDUSI cable
1x4x0,8–25m autostop/ INDUSI cable BL214 1/2
1x4x0,8–275m autostop/ INDUSI cable BL214 0,5
BL217 1/2 1x4x0,8–10m autostop/ INDUSI cable
BL217 0,5 1x4x0,8–275m autostop/ INDUSI cable
1x4x0,8–25m autostop/ INDUSI cable BL216 1/2
1x4x0,8–275m autostop/ INDUSI cable BL216 0,5
266.7–19x1(3) ecranat/screened
267.7–24x1(4) ecranat/screened
166.4–19x1(3) ecranat/screened
167.4–80x1,5(4) ecranat/screened
1900m
1900m
166.3–19x1(3) ecranat/screened
167.3–104x1,5(4) ecranat/screened
1900m
1900m
166.2–19x1(3) ecranat/screened
167.2–128x1,5(4) ecranat/screened
DS(BL212/BL213) Km250+700
DS(BL214/BL215) Km252+445
DS(BL216/BL217) Km254+170
② Y-7AD BJ 612–4x2,5(0) 35m
611–4x2,5(0) 35m XF-4AD BJ ③
③ XF-4AD BJ 612–4x2,5(0) 25m
25m 612–4x2,5(0) XF-3AD BJ ①
① XF-3AD BJ 612–4x2,5(0) 35m
611–4x2,5(0) 35m XF-2AD BJ ③
8Ω
8Ω
8Ω
410 –4x10 30m
Cablu neecranat
810 –4x1,5 30m
Cablu neecranat
410 –4x10 30m
Cablu neecranat
810 –4x1,5 30m
Cablu neecranat
410 –4x10 30m
Cablu neecranat
810 –4x1,5 30m
Cablu neecranat
BL112
262.7.2–16x1(4)–25m
BL113
162.4.2–16x1(4)–25m
BL114
162.4.1–16x1(4)–25m
BL115
162.3.2–16x1(4)–25m
BL116
162.3.1–16x1(4)–25m
BL117
162.2.2–16x1(4)–25m
BL113 1/2 1x4x0,8–10m autostop/ INDUSI cable
BL113 0,5 1x4x0,8–275m autostop/ INDUSI cable
1x4x0,8–25m autostop/ INDUSI cable BL112 1/2
1x4x0,8–275m autostop/ INDUSI cable BL112 0,5
BL115 1/2 1x4x0,8–10m autostop/ INDUSI cable
BL115 0,5 1x4x0,8–275m autostop/ INDUSI cable
1x4x0,8–25m autostop/ INDUSI cable BL114 1/2
1x4x0,8–275m autostop/ INDUSI cable BL114 0,5
BL117 1/2 1x4x0,8–10m autostop/ INDUSI cable
BL117 0,5 1x4x0,8–275m autostop/ INDUSI cable
1x4x0,8–25m autostop/ INDUSI cable BL116 1/2
1x4x0,8–275m autostop/ INDUSI cable BL116 0,5
DS(BL112/BL113) Km. 250+700
DS(BL114/BL115) Km. 252+445
DS(BL116/BL117) Km. 254+170
161.4–19x1(3) ecranat/screened
162.4–80x1,5(4) ecranat/screened
163.4–4x16 ecranat/screened
261.7–19x1(3) ecranat/screened
262.7–24x1(4) ecranat/screened
263.7–4x16 ecranat/screened
1900m
1900m
1900m
161.3–19x1(3) ecranat/screened
162.3–104x1,5(4) ecranat/screened
163.3–4x16 ecranat/screened
1900m
1900m
1900m
161.2–19x1(3) ecranat/screened
162.2–128x1,5(4) ecranat/screened
163.2–4x16 ecranat/screened
④ YF-7AD BJ 612–4x2,5(0) 35m
611–4x2,5(0) 35m X-4AD BJ ①
① X-4AD BJ 612–4x2,5(0) 25m
612–4x2,5(0) 25m X-3AD BJ ③
③ X-3AD BJ 612–4x2,5(0) 35m
611–4x2,5(0) 35m X-2AD BJ ①
8Ω
8Ω
8Ω

Statia: Archita

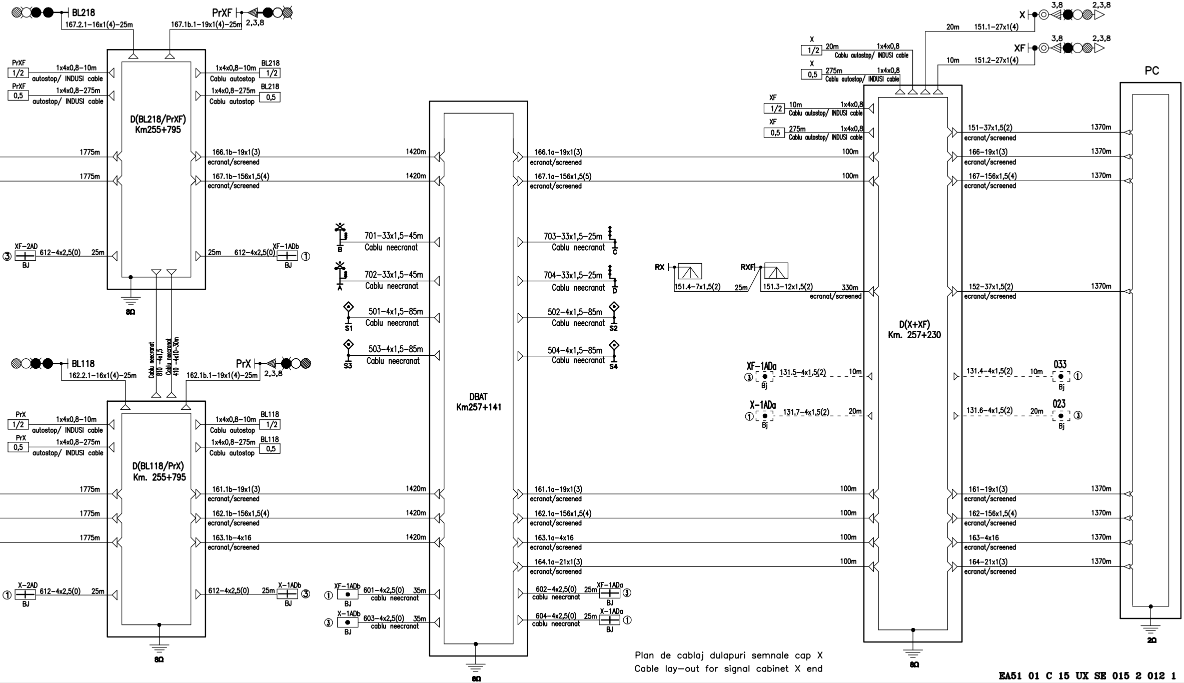
BL218
167.2.1–16x1(4)–25m
PrXF
167.1b.1–19x1(4)–25m
2,3,8
PrXF
1/2
1x4x0,8–10m
autostop/ INDUSI cable
PrXF
0,5
1x4x0,8–275m
autostop/ INDUSI cable
1x4x0,8–10m
Cablu autostop
BL218
1/2
1x4x0,8–275m
Cablu autostop
BL218
0,5
D(BL218/PrXF)
Km255+795
1775m
166.1b–19x1(3)
ecranat/screened
1420m
1775m
167.1b–156x1,5(4)
ecranat/screened
1420m
③
XF–2AD
612–4x2,5(0)
25m
BJ
25m
612–4x2,5(0)
XF–1ADb
BJ
①
8Ω
Cablu neecranat
810 –4x1,5
Cablu neecranat
410 –4x10–30m
BL118
162.2.1–16x1(4)–25m
PrX
162.1b.1–19x1(4)–25m
2,3,8
PrX
1/2
1x4x0,8–10m
autostop/ INDUSI cable
PrX
0,5
1x4x0,8–275m
autostop/ INDUSI cable
1x4x0,8–10m
Cablu autostop
BL118
1/2
1x4x0,8–275m
Cablu autostop
BL118
0,5
D(BL118/PrX)
Km. 255+795
1775m
161.1b–19x1(3)
ecranat/screened
1420m
1775m
162.1b–156x1,5(4)
ecranat/screened
1420m
1775m
163.1b–4x16
ecranat/screened
1420m
①
X–2AD
612–4x2,5(0)
25m
BJ
612–4x2,5(0)
25m
X–1ADb
BJ
③
8Ω
B
701–33x1,5–45m
Cablu neecranat
A
702–33x1,5–45m
Cablu neecranat
S1
501–4x1,5–85m
Cablu neecranat
S3
503–4x1,5–85m
Cablu neecranat
①
XF–1ADb
BJ
601–4x2,5(0)
35m
cablu neecranat
③
X–1ADb
BJ
603–4x2,5(0)
35m
cablu neecranat
DBAT
Km257+141
8Ω
166.1a–19x1(3)
ecranat/screened
100m
167.1a–156x1,5(5)
ecranat/screened
100m
703–33x1,5–25m
Cablu neecranat
C
704–33x1,5–25m
Cablu neecranat
D
502–4x1,5–85m
Cablu neecranat
S2
504–4x1,5–85m
Cablu neecranat
S4
161.1a–19x1(3)
ecranat/screened
100m
162.1a–156x1,5(4)
ecranat/screened
100m
163.1a–4x16
ecranat/screened
100m
164.1a–21x1(3)
ecranat/screened
100m
602–4x2,5(0)
25m
XF–1ADa
cablu neecranat
BJ
③
604–4x2,5(0)
25m
X–1ADa
cablu neecranat
BJ
①
RX
151.4–7x1,5(2)
25m
RXF
151.3–12x1,5(2)
330m
ecranat/screened
XF–1ADa
③
Bj
131.5–4x1,5(2)
10m
X–1ADa
①
Bj
131.7–4x1,5(2)
20m
X
3,8
2,3,8
20m
151.1–27x1(4)
XF
3,8
2,3,8
10m
151.2–27x1(4)
X
1/2
20m
1x4x0,8
Cablu autostop/ INDUSI cable
X
0,5
275m
1x4x0,8
Cablu autostop/ INDUSI cable
XF
1/2
10m
1x4x0,8
Cablu autostop/ INDUSI cable
XF
0,5
275m
1x4x0,8
Cablu autostop/ INDUSI cable
D(X+XF)
Km. 257+230
8Ω
151–37x1,5(2)
ecranat/screened
1370m
166–19x1(3)
ecranat/screened
1370m
167–156x1,5(4)
ecranat/screened
1370m
152–37x1,5(2)
ecranat/screened
1370m
131.4–4x1,5(2)
10m
033
Bj
①
131.6–4x1,5(2)
20m
023
Bj
③
161–19x1(3)
ecranat/screened
1370m
162–156x1,5(4)
ecranat/screened
1370m
163–4x16
ecranat/screened
1370m
164–21x1(3)
ecranat/screened
1370m
PC
2Ω

Plan de cablaj dulapuri semnale cap X
Cable lay-out for signal cabinet X end

EA51 01 C 15 UX SE 015 2 012 1

1000x297

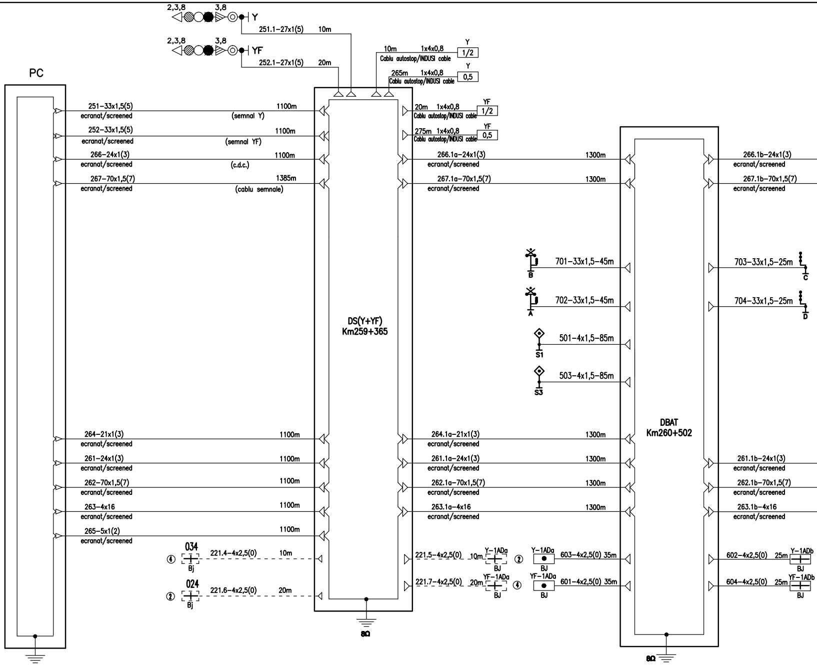
2,3,8
3,8
Y
251.1–27x1(5) 10m
2,3,8
3,8
YF
252.1–27x1(5) 20m
10m 1x4x0,8
Cablu autostop/INDUSI cable
Y
1/2
265m 1x4x0,8
Cablu autostop/INDUSI cable
Y
0,5
PC
251–33x1,5(5) ecranat/screened 1100m (semnal Y)
252–33x1,5(5) ecranat/screened 1100m (semnal YF)
266–24x1(3) ecranat/screened 1100m (c.d.c.)
267–70x1,5(7) ecranat/screened 1385m (cablu semnale)
20m 1x4x0,8 Cablu autostop/INDUSI cable
YF
1/2
275m 1x4x0,8 Cablu autostop/INDUSI cable
YF
0,5
266.1a–24x1(3) ecranat/screened 1300m
267.1a–70x1,5(7) ecranat/screened 1300m
266.1b–24x1(3) ecranat/screened
267.1b–70x1,5(7) ecranat/screened
B
701–33x1,5–45m
703–33x1,5–25m
C
A
702–33x1,5–45m
704–33x1,5–25m
D
DS(Y+YF)
Km259+365
501–4x1,5–85m
S1
503–4x1,5–85m
S3
DBAT
Km260+502
264–21x1(3) ecranat/screened 1100m
261–24x1(3) ecranat/screened 1100m
262–70x1,5(7) ecranat/screened 1100m
263–4x16 ecranat/screened 1100m
265–5x1(2) ecranat/screened 1100m
264.1a–21x1(3) ecranat/screened 1300m
261.1a–24x1(3) ecranat/screened 1300m
262.1a–70x1,5(7) ecranat/screened 1300m
263.1a–4x16 ecranat/screened 1300m
261.1b–24x1(3) ecranat/screened
262.1b–70x1,5(7) ecranat/screened
263.1b–4x16 ecranat/screened
④
034
Bj
221.4–4x2,5(0) 10m
②
024
Bj
221.6–4x2,5(0) 20m
221.5–4x2,5(0) 10m
Y–1ADa
BJ
②
221.7–4x2,5(0) 20m
YF–1ADa
BJ
④
Y–1ADa
BJ
603–4x2,5(0) 35m
YF–1ADa
BJ
601–4x2,5(0) 35m
602–4x2,5(0) 25m
Y–1ADb
BJ
604–4x2,5(0) 25m
YF–1ADb
BJ
2Ω
8Ω
8Ω

Plan de cablaj dulapuri semnale cap Y

Cable lay-out for signal cabinet Y end

Statia: Archita

02/03

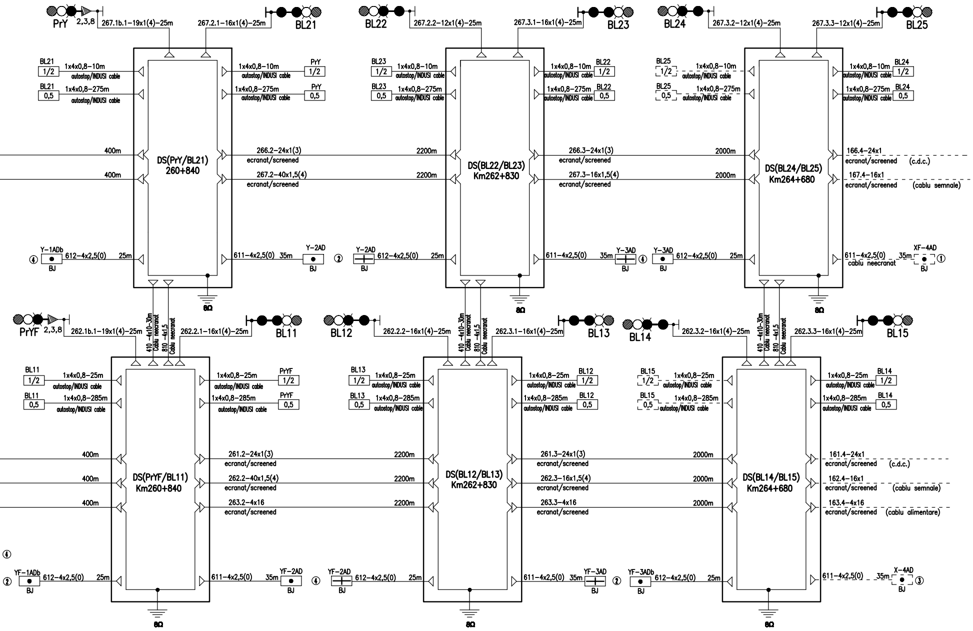
PrY
2,3,8
267.1b.1–19x1(4)–25m
267.2.1–16x1(4)–25m
BL21
BL22
267.2.2–12x1(4)–25m
267.3.1–16x1(4)–25m
BL23
BL24
267.3.2–12x1(4)–25m
267.3.3–12x1(4)–25m
BL25
1x4x0,8–10m
autostop/INDUSI cable
1x4x0,8–275m
1/2
0,5
DS(PrY/BL21)
260+840
DS(BL22/BL23)
Km262+830
DS(BL24/BL25)
Km264+680
400m
266.2–24x1(3)
ecranat/screened
267.2–40x1,5(4)
2200m
266.3–24x1(3)
267.3–16x1,5(4)
2000m
166.4–24x1
(c.d.c.)
167.4–16x1
(cablu semnale)
Y-1ADb
612–4x2,5(0)
25m
611–4x2,5(0)
35m
Y-2AD
Y-3AD
XF-4AD
cablu neecranat
BJ
8Ω
410 –4x10–30m
Cablu neecranat
810 –4x1,5
PrYF
262.1b.1–19x1(4)–25m
262.2.1–16x1(4)–25m
BL11
BL12
262.2.2–16x1(4)–25m
262.3.1–16x1(4)–25m
BL13
BL14
262.3.2–16x1(4)–25m
262.3.3–16x1(4)–25m
BL15
1x4x0,8–25m
1x4x0,8–285m
DS(PrYF/BL11)
Km260+840
DS(BL12/BL13)
Km262+830
DS(BL14/BL15)
Km264+680
261.2–24x1(3)
262.2–40x1,5(4)
263.2–4x16
261.3–24x1(3)
262.3–16x1,5(4)
263.3–4x16
161.4–24x1
162.4–16x1
163.4–4x16
(cablu alimentare)
YF-1ADb
YF-2AD
YF-3AD
YF-3ADb
X-4AD
①
②
③
④

EA51 01 C 15 UX SE 015 2 012 1 03/03

(810x297)