LEGENDA
SYMBOLS

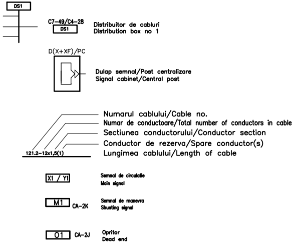
DS1
C7-49/C4-28
DS1
D(X+XF)/PC
121.2-12x1,5(1)
X1 / Y1
M1
CA-2K
O1
CA-2J

Distribuitor de cabluri
Distribution box no 1

Dulap semnal/Post centralizare
Signal cabinet/Central post

Numarul cablului/Cable no.
Numar de conductoare/Total number of conductors in cable
Sectiunea conductorului/Conductor section
Conductor de rezerva/Spare conductor(s)
Lungimea cablului/Length of cable

Semnal de circulatie
Main signal

Semnal de manevra
Shunting signal

Opritor
Dead end

Indice Index	Data Date	Modificare Modification/Revision	Proiectant Designer	Aprobat Consultant Approved Consultant	Aprobat CFR Approved CFR
D					
C					
B					
A					

GUVERNUL ROMANIEI
ROMANIAN GOVERNMENT

PROIECT FINANȚAT DE UNIUNEA EUROPEANĂ
EUROPEAN UNION FINANCED PROJECT

CLIENT / CLIENT

C.N.C.F. "C.F.R." - S.A.

ITALFERR
GRUPPO FERROVIE DELLO STATO
Joint Venture leader

Scott Wilson

OBERMEYER
PLANEN + BERATEN GmbH

TECNIC
Consulting Engineers

CONSULTANT / CONSULTANT

			Data Date	Semnături Signature
Aprobat Approved	Şef proiect Project manager	R. Liuzza	12.12.2011	
Aprobat Approved	Coordonator Secţiune 1 Section 1 Coordinator	C. Gambelli	12.12.2011	
Verificat Checked	Expert Cheie Key Expert	P. Amodio	12.12.2011	

SUBCONTRACTANT / SUBCONTRACTOR

AREX COMPANY

Aprobat Approved	Responsabil Subconsultant Subconsultant Responsible	A. Stanciu - Dinulescu	12.12.2011	
Întocmit Elaborated	Proiectant Designer	ing. Juganaru Adriana	12.12.2011	

Reabilitarea liniei de cale ferata Braşov - Simeria, parte componentă a coridorului IV Pan European, pentru circulaţia trenurilor cu viteza maximă de 160 km/h,
Tronsonul : Braşov - Sighişoara
Rehabilitation of the railway line Braşov - Simeria, component Part of the IV Pan-European Corridor, for the trains circulation with maximum speed of 160 km/h,
Section : Braşov - Sighişoara

Proiect/Project
2004/RO/16/P/PA/003

Faza / Phase:
D.E. / D.D.

Denumire desen / Drawing Title :

Statia / Station VANATORI
Diagrams of conections for signals
Diagrame cablaj semnale

Codificare / Codification System	Scara / Scale F&S / No scale	LOT / LOT	Nr. / No 01 /69

E A 5 1 | 0 1 | E | 1 7 | B X | S E | 0 1 | 7 | 2 | 0 0 7 | 1

210x297=0.063mp

Statia: Vanatori

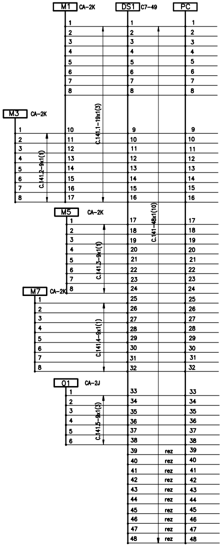
M1
CA-2K
DS1
C7-49
PC
M3
CA-2K
C.141.1-19x1(3)
C.141.2-9x1(1)
M5
CA-2K
C.141-48x1(10)
C.141.3-9x1(1)
M7
CA-2K
C.141.4-9x1(1)
O1
CA-2J
C.141.5-9x1(3)
rez

Cablul 141

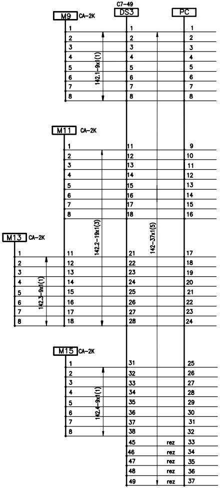
C7-49
M9
CA-2K
DS3
PC
142.1-9x1(1)
M11
CA-2K
142.2-19x1(3)
142-37x1(5)
M13
CA-2K
142.3-9x1(1)
M15
CA-2K
142.4-9x1(1)
rez

Cablul 142

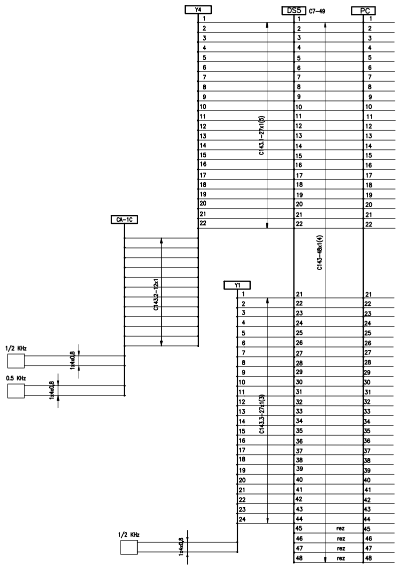
Y4
DS5 C7-49
PC
C143.1-27x1(5)
C143-48x1(4)
CA-1C
C143.2-12x1
Y1
C143.3-27x1(3)
1/2 KHz
0.5 KHz
1x4x0,8
rez

Cablul 143

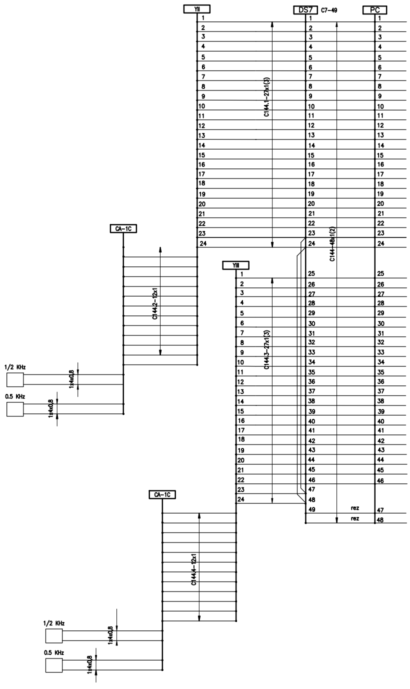
YII
DS7 C7-49
PC
C144.1-27x1(3)
C144-48x1(2)
CA-1C
C144.2-12x1
YIII
C144.3-27x1(3)
CA-1C
C144.4-12x1
1/2 KHz
0.5 KHz
1x4x0,8
rez

Cablul 144

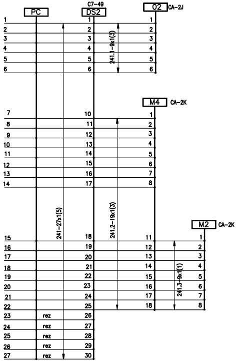
PC
C7-49
DS2
O2
CA-2J
M4
CA-2K
M2
CA-2K
241.1-9x1(3)
241-27x1(5)
241.2-19x1(3)
241.3-9x1(1)
rez
rez
rez
rez
rez

Cablul 241

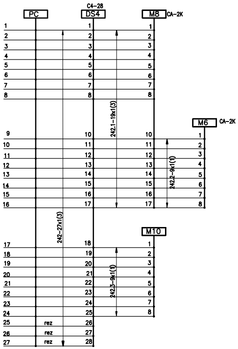
PC
C4-28
DS4
M8
CA-2K
M6
CA-2K
M10
242.1-19x1(3)
242.2-9x1(1)
242-27x1(3)
242.3-9x1(1)
rez
rez
rez

Cablul 242

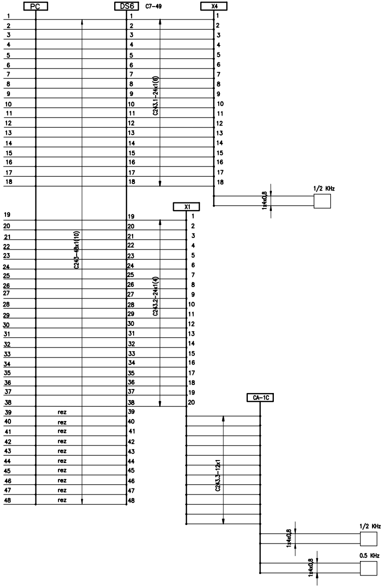
PC
DS6
C7-49
X4
X1
CA-1C
C243.1-24x1(6)
C243-48x1(10)
C243.2-24x1(4)
C243.3-12x1
1x4x0,8
1/2 KHz
0.5 KHz
rez

Cablul 243

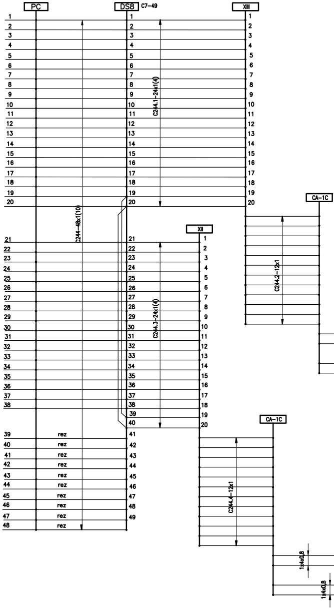
PC
DS8
C7-49
XIII
XII
CA-1C
C244.1-24x1(4)
C244-48x1(10)
C244.3-24x1(4)
C244.2-12x1
C244.4-12x1
1x4x0,8
rez

Cablul 244

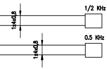
1/2 KHz
1x4x0,8
0.5 KHz
1x4x0,8

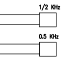
1/2 KHz
0.5 KHz