LEGENDA
SYMBOLS

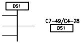
DS1
C7-49/C4-28
DS1

Distribuitor de cabluri
Distribution box no 1

Dulap semnal/Post centralizare
Signal cabinet/Central post

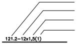
121.2-12x1,5(1)

Numarul cablului/Cable no.
Numar de conductoare/Total number of conductors in cable
Sectiunea conductorului/Conductor section
Conductor de rezerva/Spare conductor(s)
Lungimea cablului/Length of cable

X1 / Y1 — Semnal de circulatie
Main signal

M1 CA-2K — Semnal de manevra
Shunting signal

O1 CA-2J — Opritor
Dead end

Indice Index	Data Date	Modificare Modification/Revision	Proiectant Designer	Aprobat Consultant Approved Consultant	Aprobat CFR Approved CFR
D					
C					
B					
A					

GUVERNUL ROMANIEI
ROMANIAN GOVERNMENT

PROIECT FINANŢAT DE UNIUNEA EUROPEANĂ
EUROPEAN UNION FINANCED PROJECT

CLIENT / CLIENT

C.N.C.F. "C.F.R." - S.A.

ITALFERR
GRUPPO FERROVIE DELLO STATO
Joint Venture leader

Scott Wilson

OBERMEYER
PLANEN + BERATEN GmbH

TECNIC
Consulting Engineers

CONSULTANT / CONSULTANT

			Data Date	Semnătură Signature
Aprobat Approved	Şef proiect Project manager	R. Liuzza	12.12.2011	
Aprobat Approved	Coordonator Secţiune 1 Section 1 Coordinator	C. Gambelli	12.12.2011	
Verificat Checked	Expert Cheie Key Expert	P. Amodio	12.12.2011	

SUBCONTRACTANT / SUBCONTRACTOR

AREX COMPANY

Aprobat Approved	Responsabil Subconsultant Subconsultant Responsible	A. Stanciu - Dinulescu	12.12.2011	
Întocmit Elaborated	Proiectant Designer	ing. Topala Madalin	12.12.2011	

Reabilitarea liniei de cale ferata Brasov - Simeria, parte componentă a coridorului IV Pan European, pentru circulaţia trenurilor cu viteza maximă de 160 km/h,
Tronsonul : Brasov - Sighisoara
Rehabilitation of the railway line Brasov - Simeria, component Part of the IV Pan-European Corridor, for the trains circulation with maximum speed of 160 km/h,
Section : Brasov - Sighisoara

Proiect/Project
2004/RO/16/P/PA/003

Faza / Phase:
D.E. / D.D.

Denumire desen / Drawing Title :

Statia / Station ALBESTI TARNAVA
Diagrame de cablaj pentru retele cabluri semnale
Cable wiring diagrams for signals

Codificare / Codification System	Scara / Scale Fără / No scale	LOT / LOT	Nr. / No 01 / 8

E A 5 1 | 0 1 | E | 1 9 | B X | S E | 0 1 | 9 | 2 | 0 0 7 | 1

Statia:

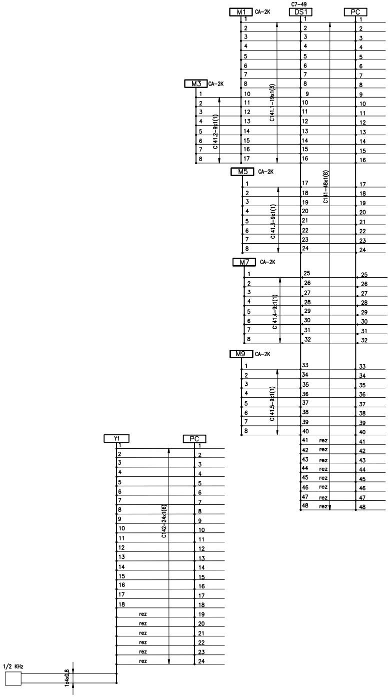
M1
CA-2K
C7-49
DS1
PC
M3
CA-2K
C141.2-9x1(1)
C141.1-19x1(3)
M5
CA-2K
C141-48x1(8)
C141.3-9x1(1)
M7
CA-2K
C141.4-9x1(1)
M9
CA-2K
C141.5-9x1(1)
rez
Y1
PC
C142-24x1(6)
rez
1/2 KHz
1x4x0,8

Cablul 141,142

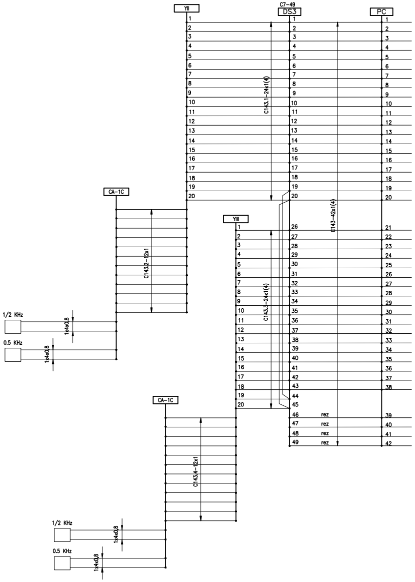
YII
C7-49
DS3
PC
C143.1-24x1(4)
C143-42x1(4)
CA-1C
C143.2-12x1
1/2 KHz
1x4x0,8
0.5 KHz
1x4x0,8
YIII
C143.3-24x1(4)
rez
CA-1C
C143.4-12x1
1/2 KHz
1x4x0,8
0.5 KHz
1x4x0,8

Cablul 143

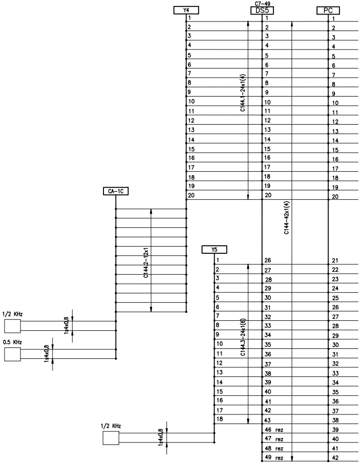
C7-49
Y4
DS5
PC
C144.1-24x1(4)
C144-42x1(4)
CA-1C
C144.2-12x1
Y5
C144.3-24x1(6)
1/2 KHz
1x4x0,8
0.5 KHz
1x4x0,8
1/2 KHz
1x4x0,8
46 rez
47 rez
48 rez
49 rez

Cablul 144

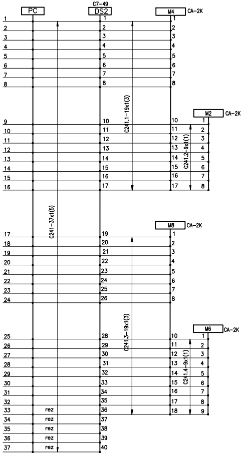
PC
C7-49
DS2
M4
CA-2K
C241.1-19x1(3)
M2
CA-2K
C241.2-9x1(1)
C241-37x1(5)
M8
CA-2K
C241.3-19x1(3)
M6
CA-2K
C241.4-9x1(1)
rez

Cablul 241

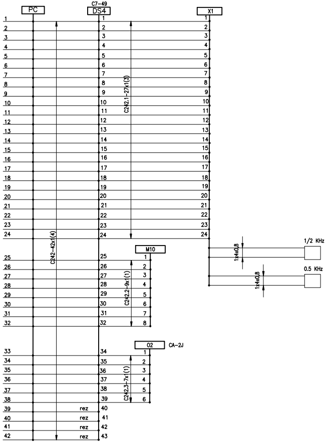
PC
C7-49
DS4
X1
C242-42x1(4)
C242.1-27x1(3)
M10
C242.2-9x1(1)
02
CA-2J
C242.3-7x1(1)
rez
rez
rez
rez
1x4x0,8
1/2 KHz
1x4x0,8
0.5 KHz

Cablul 242

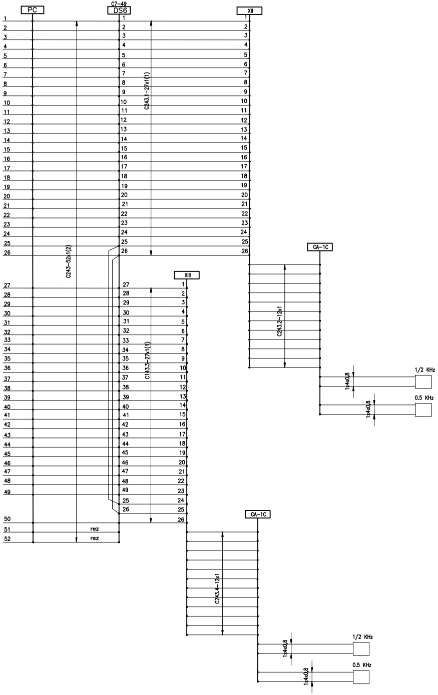
PC
C7-49
DS6
XII
C243.1-27x1(1)
C243-52x1(2)
CA-1C
C243.2-12x1
1x4x0,8
1/2 KHz
1x4x0,8
0.5 KHz
XIII
C143.3-27x1(1)
rez
rez
CA-1C
C243.4-12x1
1x4x0,8
1/2 KHz
1x4x0,8
0.5 KHz

Cablul 243

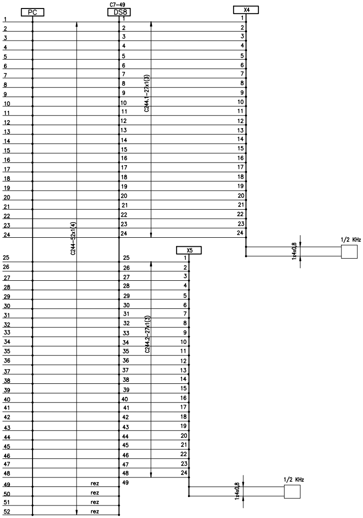
PC
C7-49
DS8
X4
X5
C244-52x1(4)
C244.1-27x1(3)
C244.2-27x1(3)
1x4x0,8
1/2 KHz
1x4x0,8
1/2 KHz
rez
rez
rez
rez

Cablul 244

Statia: ALBESTI

EA51 01 E 19 BX SE 019 2 007 1 8/8