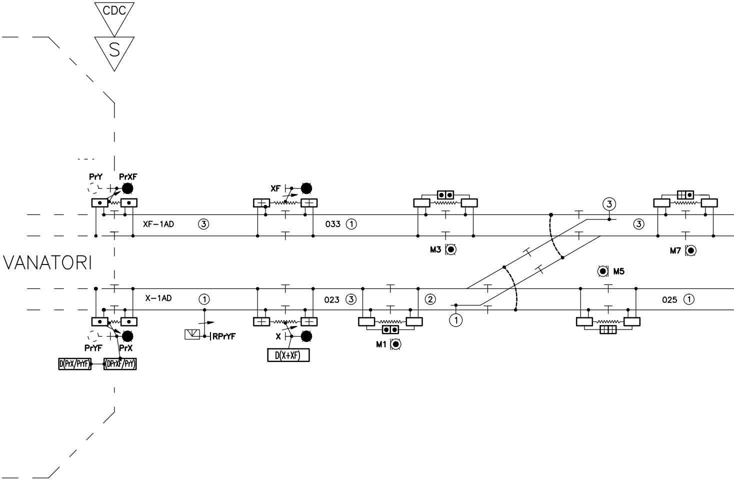

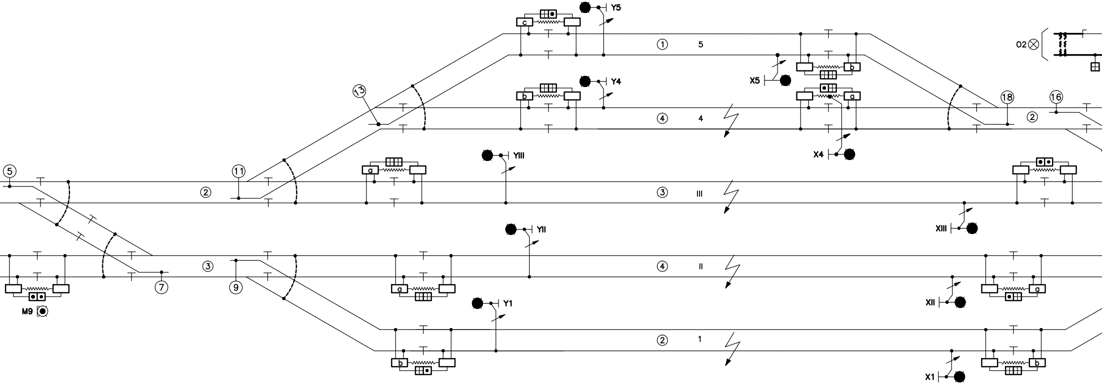

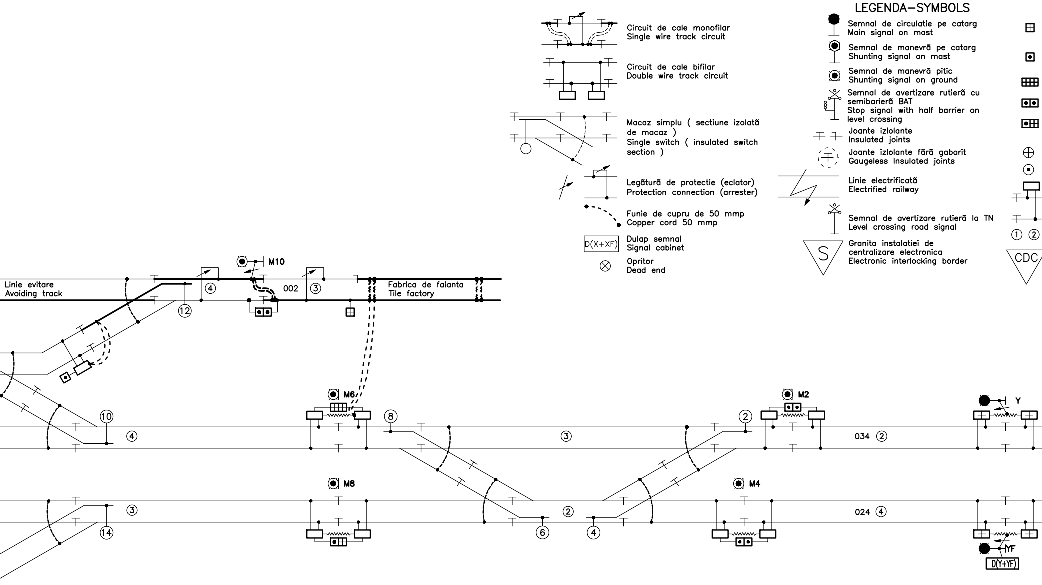

## LEGENDA—SYMBOLS

Circuit de cale monofilar
Single wire track circuit

Circuit de cale bifilar
Double wire track circuit

Macaz simplu ( sectiune izolată de macaz )
Single switch ( insulated switch section )

Legătură de protectie (eclator)
Protection connection (arrester)

Funie de cupru de 50 mmp
Copper cord 50 mmp

D(X+XF) Dulap semnal
Signal cabinet

Opritor
Dead end

Semnal de circulatie pe catarg
Main signal on mast

Semnal de manevră pe catarg
Shunting signal on mast

Semnal de manevră pitic
Shunting signal on ground

Semnal de avertizare rutieră cu semibarieră BAT
Stop signal with half barrier on level crossing

Joante izlolante
Insulated joints

Joante izlolante fără gabarit
Gaugeless Insulated joints

Linie electrificată
Electrified railway

Semnal de avertizare rutieră la TN
Level crossing road signal

S Granita instalatiei de centralizare electronica
Electronic interlocking border

Cutie aparataj pentru circuit de cale cap – receptie
Track circuit box – receiving end

Cutie aparataj pentru circuit de cale cap – alimentare
Track circuit box – supplying end

Cutie aparataj pentru circuite de cale – 2 capete receptie
Track circuit box – two receiving ends

Cutie aparataj pentru circuite de cale – 2 capete alimentare
Track circuit box – two supplying ends

Cutie aparataj pentru circuite de cale – 1 cap receptie, 1 cap alimentare
Track circuit box – receiving end– supplying end

Cutie de conectare pentru terminal releu
Track circuit box – receiving end

Cutie de conectare pentru terminal alimentare
Track circuit box – supplying end

Bobină de joantă
Joint coil

Secventa circuitului de cale
Track circuit sequence

Granita circuitelor de cale
Track circuit border

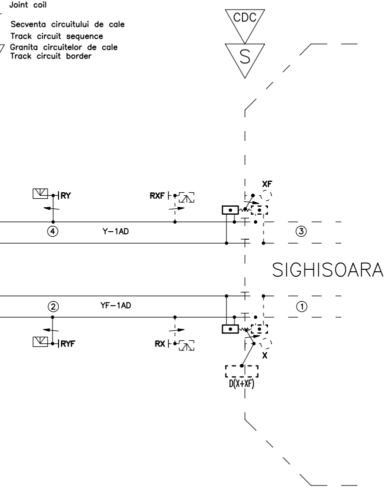

| | | | | | |
|---|---|---|---|---|---|
| D | | | | | |
| C | | | | | |
| B | | | | | |
| A | | | | | |
| Indice<br>Index | Data<br>Date | Modificare<br>Modification/Revision | Proiectant<br>Designer | Aprobat Consultant<br>Approved Consultant | Aprobat CFR<br>Approved CFR |

GUVERNUL ROMANIEI
ROMANIAN GOVERNMENT

PROIECT FINANŢAT DE UNIUNEA EUROPEANĂ
EUROPEAN UNION FINANCED PROJECT

**CLIENT / CLIENT**

**C.N.C.F. "C.F.R." - S.A.**

ITALFERR
GRUPPO FERROVIE DELLO STATO
Joint Venture leader

Scott Wilson

OBERMEYER
PLANEN + BERATEN GmbH

TECNIC
Consulting Engineers

**CONSULTANT / CONSULTANT**

| | | | Data<br>Date | Semnătură<br>Signature |
|---|---|---|---|---|
| Aprobat<br>Approved | Şef proiect<br>Project manager | R. Liuzza | 06.02.2012 | |
| Aprobat<br>Approved | Coordonator Secţiune 1<br>Section 1 Coordinator | C. Gambelli | 06.02.2012 | |
| Verificat<br>Checked | Expert Cheie<br>Key Expert | P. Amodio | 06.02.2012 | |

**SUBCONTRACTANT / SUBCONTRACTOR**

AREX COMPANY

| | | | | |
|---|---|---|---|---|
| Aprobat<br>Approved | Responsabil Subconsultant<br>Subconsultant Responsible | A. Stanciu - Dinulescu | 06.02.2012 | |
| Întocmit<br>Elaborated | Proiectant<br>Designer | ing. Topala Madalin | 06.02.2012 | |

**Reabilitarea liniei de cale ferata Braşov - Simeria, parte componentă a coridorului IV Pan European, pentru circulaţia trenurilor cu viteza maximă de 160 km/h,**
**Tronsonul : Braşov - Sighişoara**
**Rehabilitation of the railway line Braşov - Simeria, component Part of the IV Pan-European Corridor, for the trains circulation with maximum speed of 160 km/h,**
**Section : Braşov - Sighişoara**

**Proiect/Project**
**2004/RO/16/P/PA/003**

**Faza / Phase:**
**P.Th. / T.D.**

**Denumire desen / Drawing Title :**

**Statia / Station ALBESTI TARNAVA**
**Plan bifilar de izolare**
**Track circuit plan**

| Codificare / Codification System | Scara / Scale<br>Fără / No scale | LOT / LOT | Nr. / No<br>01 / 01 |
|---|---|---|---|

E A 5 1 | 0 1 | C | 1 9 | U X | S E | 0 1 | 9 | 2 | 0 0 3 | 2

1470x297=0.44mp