LEGENDA
SYMBOLS

DR1 — Distribuitor de cabluri / Distribution box no 1

Cap de cablu cu/fara impamantare / Cable terminal with/without earth

Legatura echipotentiala / Equipotential connection

Priza de pamant / Earth terminal

D(X+XF)/PC — Dulap semnal/Post centralizare / Signal cabinet/Central post

Numarul cablului/Cable no.

Numar de conductoare/Total number of conductors in cable

Sectiunea conductorului/Conductor section

Conductor de rezerva/Spare conductor(s)

151,2–12x1,5(X1) — 170m — Lungimea cablului/Length of cable

Ecranat/screened — Tipul cablului/Cable type

Daca tipul cablului nu este specificat acesta va fi considerat necranat.
If the cable type is not specified it will be considered unscreened

Semnal de circulatie pe catarg / Main signal on mast

Fan galben, verde, rosu, alb, albastru, indicator circulatie pe stalpisor / Yellow, green, red, withe, blue, traffic on left indicator lamp

Indicatoare de viteza / Speed and prespeed indicators

Semnal repetitor / Repeater signal

Semnal de manevra pe catarg / Shunting signal on ground / mast

Semafoare automate cu semnal rutier la tin / Level crossing (LC) halfbarriers with road signal

Semnal rutier la trecere la nivel / Level crossing road signal

Opritor / Dead end

1/2 | 0,5 — 0,5 — Inductor (indual 500Hz sau 1000/2000Hz / 50Hz or 1000/2000Hz Indual inductor

Semnal BLA cu reper de oprire pentru TN / ABL signal with fix damage indicator for LC

Semnal avertiz la TN / Warning signal for LC

Index / Index	Date / Date	Modificare / Modification/Revision	Proiectant / Designer	Aprobat Consultant / Approved Consultant	Aprobat CFR / Approved CFR
D					
C					
B					
A					

GUVERNUL ROMANIEI
ROMANIAN GOVERNMENT

PROIECT FINANŢAT DE UNIUNEA EUROPEANĂ
EUROPEAN UNION FINANCED PROJECT

CFR

C.N.C.F. "C.F.R." - S.A.

CLIENT / CLIENT

ITALFERR GRUPPO FERROVIE DELLO STATO — Joint Venture leader
Scott Wilson
OBERMEYER PLANEN + BERATEN GmbH
TECNIC Consulting Engineers

CONSULTANT / CONSULTANT

			Date / Date	Semnătura / Signature
Aprobat / Approved	Şef proiect / Project manager	R. Luzza	06.02.2012	
Aprobat / Approved	Coordonator Secţiunea 1 / Section 1 Coordinator	C. Gambelli	06.02.2012	
Verificat / Checked	Expert Cheie / Key Expert	P. Amodio	06.02.2012	

SUBCONTRACTANT / SUBCONTRACTOR

AMCF

Aprobat / Approved	Responsabil Subconsultant / Subconsultant Responsible	A. Stanciu - Dinulescu	06.02.2012	
Întocmit / Elaborated	Proiectant / Designer	ing. Topala Madalin	06.02.2012	

Reabilitarea liniei de cale ferata Braşov - Simeria, parte componentă a coridorului IV Pan European, pentru circulaţia trenurilor cu viteza maximă de 160 km/h,
Tronsonul : Braşov - Sighişoara
Rehabilitation of the railway line Braşov - Simeria, component Part of the IV Pan-European Corridor, for the trains circulation with maximum speed of 160 km/h,
Section : Braşov - Sighişoara

Proiect/Project 2004/RO/16/P/PA/003

Faza / Phase: P.Th. / T.D.

Denumire desen / Drawing Title :

Statia / ALBESTI TARNAVA
Plan cablaj retele cabluri dulapuri de semnale
Cable lay-out for signal cabinet

Codificare / Codification System	Scara / Scale / Fără / No scale	LOT / LOT	Nr. / No 01 / 03
E A 5 1 0 1 C 1 9 U X S E 0 1 9 2 0 1 2 2			
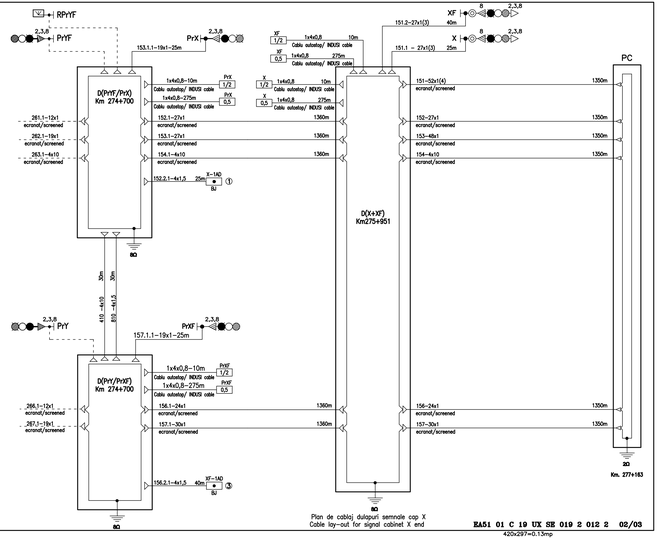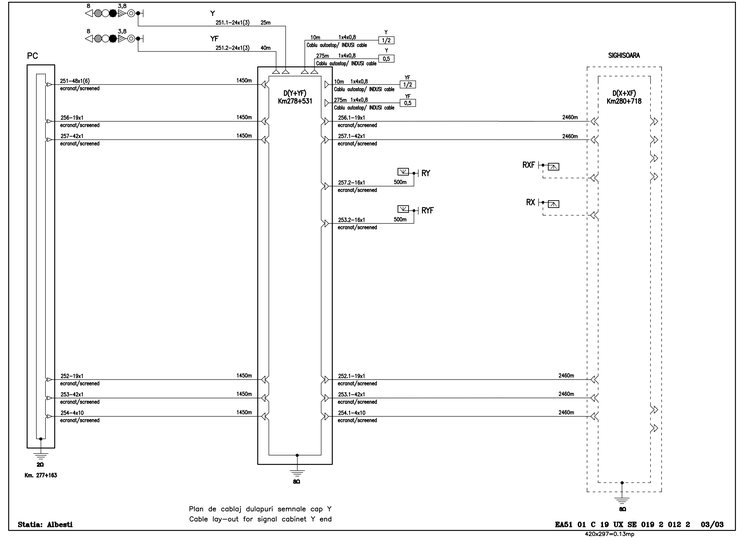
1470x297=0.44mp