LEGENDA
SYMBOLS

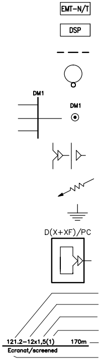
EMT–N/T
DSP
DM1
DM1
D(X+XF)/PC
121.2–12x1,5(1)
170m
Ecranat/screened

Elctromecanism de macaz trifazat netalonabil/talonabil
Nontrailable/trailable three phase point machine

Detector suplimentar de pozitie
Additional point detector

Cablu flexibil de legatura intre EM si cutia de conexiune
Flexible cable linking the point machine and the connection box

Cutie aparataj pentru electromecanism de macaz
Point machine connection box

Distribuitor de cabluri
Distribution box no 1

Cap de cablu cu/fara impamantare
Cable terminal with/without earth

Legatura echipotentiala
Equipotential connection

Priza de pamant
Earth terminal

Dulap semnal/Post centralizare
Signal cabinet/Central post

Numarul cablului/Cable no.
Numar de conductoare/Total number of conductors in cable
Sectiunea conductorului/Conductor section
Conductor de rezerva/Spare conductor(s)
Lungimea cablului/Length of cable
Tipul cablului/Cable type

Daca tipul cablului nu este specificat acesta va fi considerat neecranat.
If the cable type is not specified it will be considered unscreened

D					
C					
B					
A					
Indice Index	Data Date	Modificare Modification/Revision	Proiectant Designer	Aprobat Consultant Approved Consultant	Aprobat CFR Approved CFR

GUVERNUL ROMANIEI
ROMANIAN GOVERNMENT

PROIECT FINANŢAT DE UNIUNEA EUROPEANĂ
EUROPEAN UNION FINANCED PROJECT

CLIENT / CLIENT

CFR

C.N.C.F. "C.F.R." - S.A.

ITALFERR
GRUPPO FERROVIE DELLO STATO
Joint Venture leader

Scott Wilson

OBERMEYER
PLANEN + BERATEN GmbH

TECNIC
Consulting Engineers

CONSULTANT / CONSULTANT

			Data Date	Semnătură Signature
Aprobat Approved	Şef proiect Project manager	R. Liuzza	12.12.2011	
Aprobat Approved	Coordonator Secţiune 1 Section 1 Coordinator	C. Gambelli	12.12.2011	
Verificat Checked	Expert Cheie Key Expert	P. Amodio	12.12.2011	

SUBCONTRACTANT / SUBCONTRACTOR

AREX COMPANY

Aprobat Approved	Responsabil Subconsultant Subconsultant Responsible	A. Stanciu - Dinulescu	12.12.2011	
Întocmit Elaborated	Proiectant Designer	ing. Juganaru Adriana	12.12.2011	

Reabilitarea liniei de cale ferata Braşov - Simeria, parte componentă a coridorului IV Pan European, pentru circulaţia trenurilor cu viteza maximă de 160 km/h,
Tronsonul : Braşov - Sighişoara
Rehabilitation of the railway line Braşov - Simeria, component Part of the IV Pan-European Corridor, for the trains circulation with maximum speed of 160 km/h,
Section : Braşov - Sighişoara

Proiect/Project
2004/RO/16/P/PA/003

Faza / Phase:
P.Th. / T.D.

Denumire desen / Drawing Title :

Statia / Station SIGHISOARA
Plan cablaj retele cabluri de macaz
Cable lay-out for point machine

Codificare / Codification System	Scara / Scale Fără / No scale	LOT / LOT	Nr. / No 01 / 04

E A 5 1 | 0 1 | C | 2 1 | U X | S E | 0 2 | 1 | 2 | 0 0 4 | 1

1470x297=0.44mp

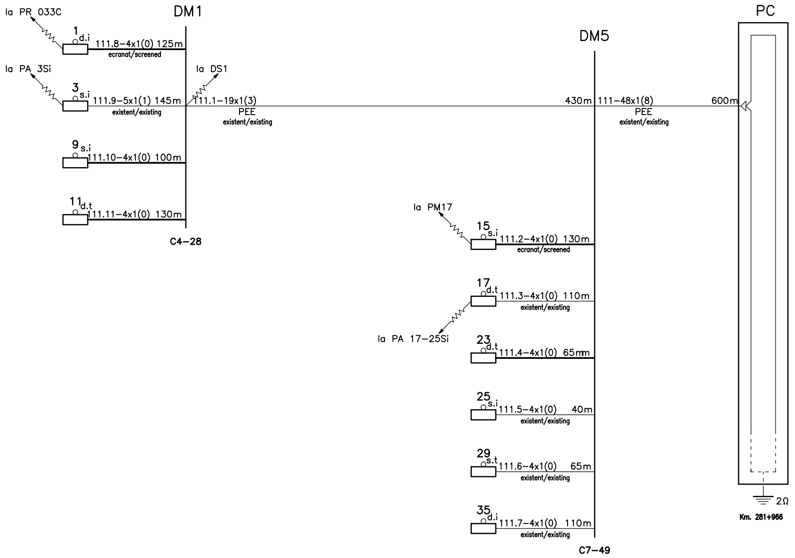

DM1
la PR 033C
1 d.i
111.8–4x1(0) 125m
ecranat/screened
la PA 3Si
3 s.i
111.9–5x1(1) 145m
existent/existing
la DS1
111.1–19x1(3)
PEE
existent/existing
9 s.i
111.10–4x1(0) 100m
11 d.t
111.11–4x1(0) 130m
C4–28
DM5
430m
111–48x1(8)
PEE
existent/existing
600m
PC
la PM17
15 s.i
111.2–4x1(0) 130m
ecranat/screened
17 d.t
111.3–4x1(0) 110m
existent/existing
la PA 17–25Si
23 d.t
111.4–4x1(0) 65mm
25 s.i
111.5–4x1(0) 40m
existent/existing
29 s.t
111.6–4x1(0) 65m
existent/existing
35 d.i
111.7–4x1(0) 110m
existent/existing
C7–49
2Ω
Km. 281+966

Plan de cablaj al pichetilor de macaz – C 111

Cable lay–out for point machine

Statia: Sighisoara

EA51 01 C 21 UX SE 021 2 004 1 02/04

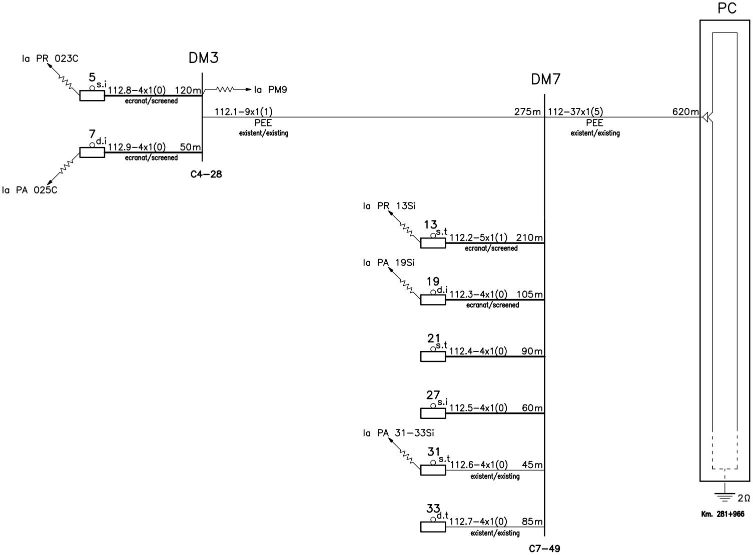
PC
DM3
DM7
la PR 023C
5 s.i
112.8–4x1(0) 120m
ecranat/screened
la PM9
112.1–9x1(1)
PEE
existent/existing
275m
112–37x1(5)
PEE
existent/existing
620m
7 d.i
112.9–4x1(0) 50m
ecranat/screened
la PA 025C
C4–28
la PR 13Si
13 s.t
112.2–5x1(1) 210m
ecranat/screened
la PA 19Si
19 d.i
112.3–4x1(0) 105m
ecranat/screened
21 s.t
112.4–4x1(0) 90m
27 s.i
112.5–4x1(0) 60m
la PA 31–33Si
31 s.t
112.6–4x1(0) 45m
existent/existing
33 d.t
112.7–4x1(0) 85m
existent/existing
C7–49
2Ω
Km. 281+966

Plan de cablaj al pichetilor de macaz – C 112
Cable lay–out for point machine

Statia: Sighisoara

EA51 01 C 21 UX SE 021 2 004 1 03/04

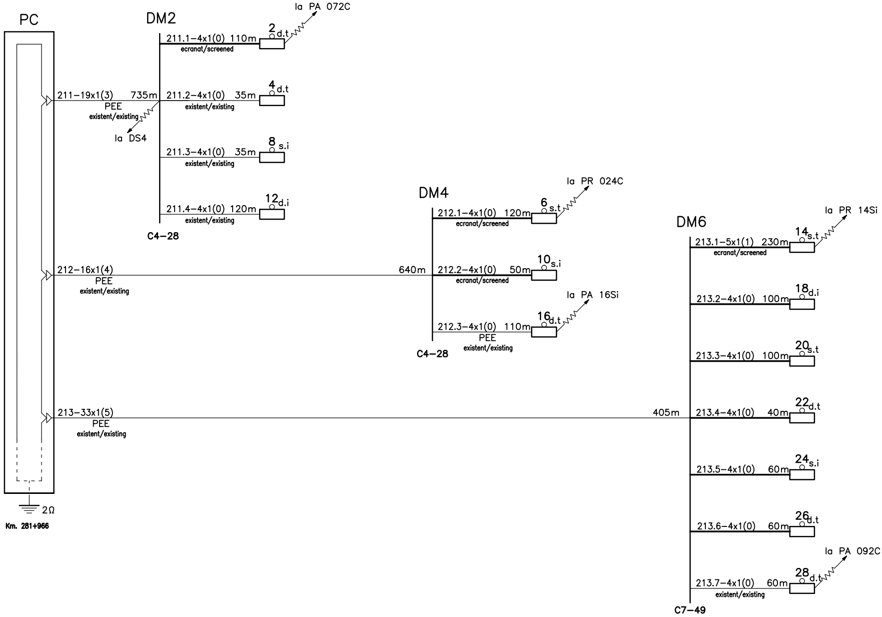
PC
DM2
la PA 072C
2 d.t
211.1–4x1(0) 110m
ecranat/screened
4 d.t
211–19x1(3) 735m
PEE
existent/existing
211.2–4x1(0) 35m
existent/existing
la DS4
8 s.i
211.3–4x1(0) 35m
existent/existing
12 d.i
211.4–4x1(0) 120m
existent/existing
C4–28
DM4
la PR 024C
6 s.t
212.1–4x1(0) 120m
ecranat/screened
10 s.i
212–16x1(4)
PEE
existent/existing
640m
212.2–4x1(0) 50m
ecranat/screened
la PA 16Si
16 d.t
212.3–4x1(0) 110m
PEE
existent/existing
C4–28
DM6
la PR 14Si
14 s.t
213.1–5x1(1) 230m
ecranat/screened
18 d.i
213.2–4x1(0) 100m
20 s.t
213.3–4x1(0) 100m
213–33x1(5)
PEE
existent/existing
405m
22 d.t
213.4–4x1(0) 40m
24 s.i
213.5–4x1(0) 60m
26 d.t
213.6–4x1(0) 60m
la PA 092C
28 d.t
213.7–4x1(0) 60m
existent/existing
C7–49
2Ω
Km. 281+966

Plan de cablaj al pichetilor de macaz – C 211, 212, 213

Cable lay–out for point machine

Statia: Sighisoara

EA51 01 C 21 UX SE 021 2 004 1 04/04