LEGENDA

SYMBOLS

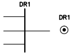

Distribuitor de cabluri
Distribution box no 1

Cap de cablu cu/fara impamantare
Cable terminal with/without earth

Legatura echipotentiala
Equipotential connection

Priza de pamant
Earth terminal

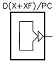

Dulap semnal/Post centralizare
Signal cabinet/Central post

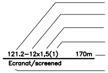
121.2–12x1,5(1)
170m
Ecranat/screened

Numarul cablului/Cable no.
Numar de conductoare/Total number of conductors in cable
Sectiunea conductorului/Conductor section
Conductor de rezerva/Spare conductor(s)
Lungimea cablului/Length of cable
Tipul cablului/Cable type
Daca tipul cablului nu este specificat
acesta va fi considerat neecranat.
If the cable type is not specified it
will be considered unscreened

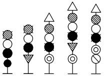

Semnal de circulatie pe catarg
Main signal on mast

Foc galben, verde, rosu, alb, albastru, indicator circulatie pe stanga
Yellow, green, red, withe, blue, traffic on left indicator lamp

Indicatoare de viteza
Speed and prespeed indicators

Semnal repetitor
Repeater signal

Semnal de manevra pe catarg
Shunting signal on ground / mast

Semibariera automata cu semnal rutier la tn
Level crossing (LC) halfbarriers with road signal

Semnal rutier la trecere la nivel
Level crossing road signal

⊗ Opritor
Dead end

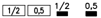

Inductor indusi 500Hz sau 1000/2000Hz
500Hz or 1000/2000Hz indusi inductor

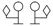

Semnal BLA cu reper de avarie pentru TN
ABL signal with fix damage indicator for LC

Semnal avarie la TN
Warning signal for LC

Indice Index	Data Date	Modificare Modification/Revision	Proiectant Designer	Aprobat Consultant Approved Consultant	Aprobat CFR Approved CFR
D					
C					
B					
A					

GUVERNUL ROMANIEI
ROMANIAN GOVERNMENT

PROIECT FINANŢAT DE UNIUNEA EUROPEANĂ
EUROPEAN UNION FINANCED PROJECT

CLIENT / CLIENT

C.N.C.F. "C.F.R." - S.A.

ITALFERR
GRUPPO FERROVIE DELLO STATO
Joint Venture leader

Scott Wilson

OBERMEYER
PLANEN + BERATEN GmbH

TECNIC
Consulting Engineers

CONSULTANT / CONSULTANT

			Data Date	Semnătură Signature
Aprobat Approved	Şef proiect Project manager	R. Lluzza	12.12.2011	
Aprobat Approved	Coordonator Secţiune 1 Section 1 Coordinator	C. Gambelli	12.12.2011	
Verificat Checked	Expert Cheie Key Expert	P. Amodio	12.12.2011	

SUBCONTRACTANT / SUBCONTRACTOR

AREX COMPANY

Aprobat Approved	Responsabil Subconsultant Subconsultant Responsible	A. Stanciu - Dinulescu	12.12.2011	
Întocmit Elaborated	Proiectant Designer	ing. Topala Madalin	12.12.2011	

Reabilitarea liniei de cale ferata Braşov - Simeria, parte componentă a coridorului IV Pan European, pentru circulaţia trenurilor cu viteza maximă de 160 km/h,
Tronsonul : Braşov - Sighişoara
Rehabilitation of the railway line Braşov - Simeria, component Part of the IV Pan-European Corridor, for the trains circulation with maximum speed of 160 km/h,
Section : Braşov - Sighişoara

Proiect/Project
2004/RO/16/P/PA/003

Faza / Phase:
P.Th. / T.D.

Denumire desen / Drawing Title :

Statia / Station SIGHISOARA
Plan cablaj retele cabluri semnale
Cable lay-out for signal

Codificare / Codification System	Scara / Scale Fără / No scale	LOT / LOT	Nr. / No 01 / 07

E A 5 1 | 0 1 | C | 2 1 | U X | S E | 0 2 | 1 | 2 | 0 0 7 | 1

1470x297=0.44mp

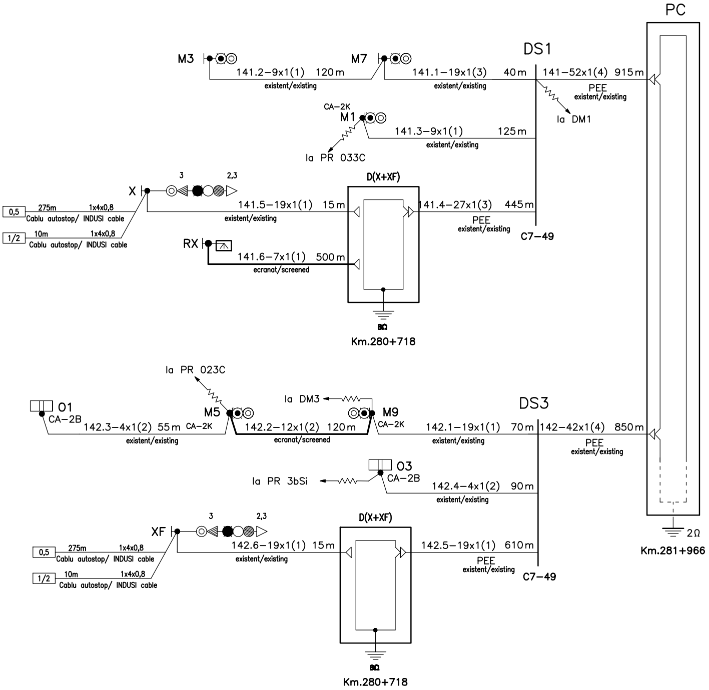
PC
DS1
M3
M7
141.2–9x1(1) 120m
existent/existing
141.1–19x1(3) 40m
existent/existing
141–52x1(4) 915m
PEE
existent/existing
la DM1
CA–2K
M1
141.3–9x1(1) 125m
existent/existing
la PR 033C
3
2,3
X
D(X+XF)
0,5
275m
1x4x0,8
Cablu autostop/ INDUSI cable
1/2
10m
1x4x0,8
Cablu autostop/ INDUSI cable
141.5–19x1(1) 15m
existent/existing
141.4–27x1(3) 445m
PEE
existent/existing
C7–49
RX
141.6–7x1(1) 500m
ecranat/screened
8Ω
Km.280+718
la PR 023C
la DM3
DS3
01
CA–2B
M5
M9
CA–2K
142.3–4x1(2) 55m
existent/existing
CA–2K
142.2–12x1(2) 120m
ecranat/screened
142.1–19x1(1) 70m
existent/existing
142–42x1(4) 850m
PEE
existent/existing
03
CA–2B
la PR 3bSi
142.4–4x1(2) 90m
existent/existing
2Ω
Km.281+966
3
2,3
XF
D(X+XF)
0,5
275m
1x4x0,8
Cablu autostop/ INDUSI cable
1/2
10m
1x4x0,8
Cablu autostop/ INDUSI cable
142.6–19x1(1) 15m
existent/existing
142.5–19x1(1) 610m
PEE
existent/existing
C7–49
8Ω
Km.280+718

Plan de cablaj semnale cap X – C 141,142
Cable lay–out for signal Y end

Statia: Sighisoara

EA51 01 C 21 UX SE 021 2 007 1 02/07

420x297=0.13mp

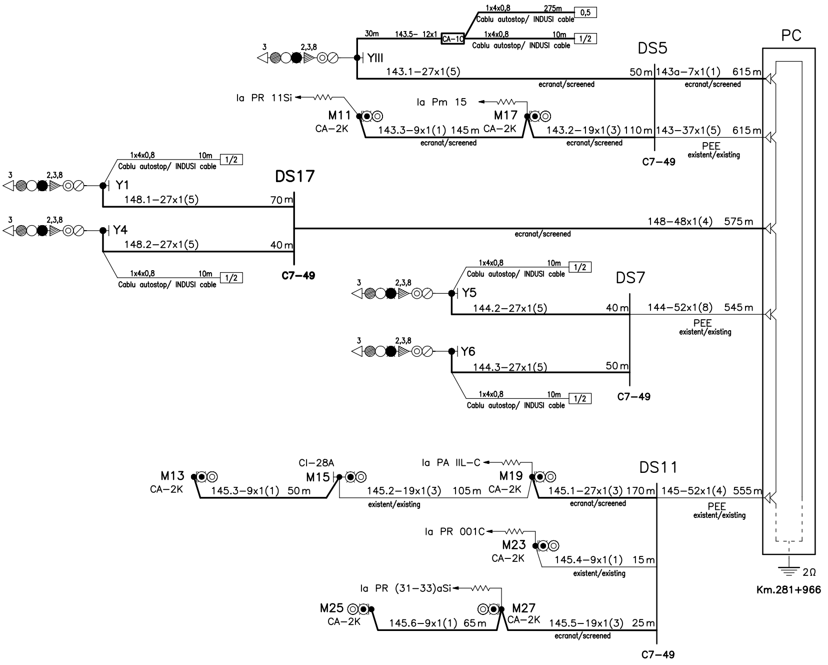
PC
DS5
DS17
DS7
DS11
C7–49
Km.281+966
2Ω
YIII
Y1
Y4
Y5
Y6
M11
M13
M15
M17
M19
M23
M25
M27
CA–2K
CA–10
CI–28A
3
2,3,8
1x4x0,8
275m
10m
0,5
1/2
Cablu autostop/ INDUSI cable
30m
143.5– 12x1
143.1–27x1(5)
50 m
143a–7x1(1) 615 m
ecranat/screened
la PR 11Si
la Pm 15
143.3–9x1(1) 145 m
143.2–19x1(3) 110 m
143–37x1(5) 615 m
PEE
existent/existing
148.1–27x1(5)
70 m
148.2–27x1(5)
40 m
148–48x1(4) 575 m
144.2–27x1(5)
40 m
144–52x1(8) 545 m
144.3–27x1(5)
50 m
la PA IIL–C
145.3–9x1(1) 50 m
145.2–19x1(3) 105 m
145.1–27x1(3) 170 m
145–52x1(4) 555 m
la PR 001C
145.4–9x1(1) 15 m
la PR (31–33)aSi
145.6–9x1(1) 65 m
145.5–19x1(3) 25 m

Plan de cablaj semnale cap X – C143,143a,144,145,148
Cable lay-out for signal X end

Statia: Sighisoara

EA51 01 C 21 UX SE 021 2 007 1 03/07

420x297=0.13mp

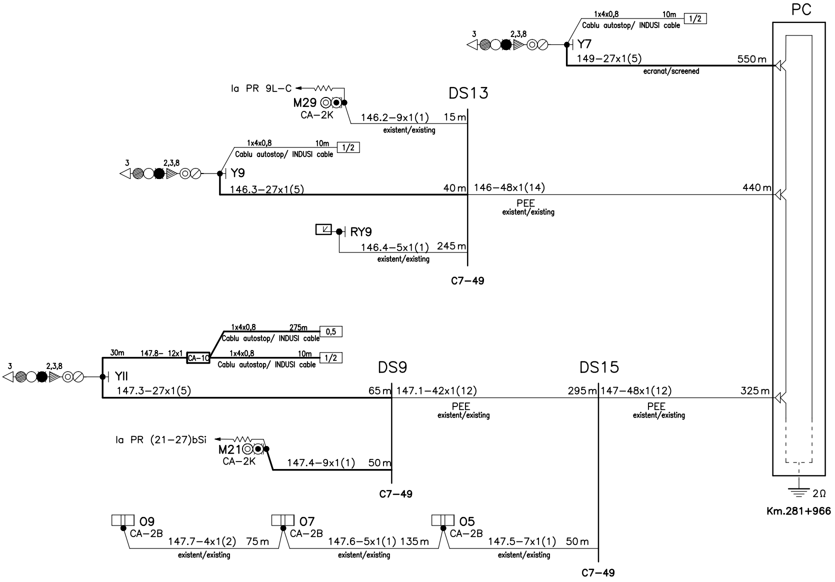
PC
1x4x0,8
10m
1/2
Cablu autostop/ INDUSI cable
3
2,3,8
Y7
149–27x1(5)
550 m
ecranat/screened
la PR 9L–C
M29
CA–2K
146.2–9x1(1)
15 m
existent/existing
DS13
1x4x0,8
10m
1/2
Cablu autostop/ INDUSI cable
3
2,3,8
Y9
146.3–27x1(5)
40 m
146–48x1(14)
PEE
existent/existing
440 m
RY9
146.4–5x1(1)
245 m
existent/existing
C7–49
1x4x0,8
275m
0,5
Cablu autostop/ INDUSI cable
30m
147.8– 12x1
CA–10
1x4x0,8
10m
1/2
Cablu autostop/ INDUSI cable
3
2,3,8
YII
147.3–27x1(5)
DS9
65 m
147.1–42x1(12)
PEE
existent/existing
DS15
295 m
147–48x1(12)
PEE
existent/existing
325 m
la PR (21–27)bSi
M21
CA–2K
147.4–9x1(1)
50 m
C7–49
2Ω
Km.281+966
O9
CA–2B
147.7–4x1(2)
75 m
existent/existing
O7
CA–2B
147.6–5x1(1)
135 m
existent/existing
O5
CA–2B
147.5–7x1(1)
50 m
existent/existing
C7–49

Plan de cablaj semnale cap X – C146,147,149

Cable lay–out for signal X end

Statia: Sighisoara

EA51 01 C 21 UX SE 021 2 007 1 04/07

420x297=0.13mp

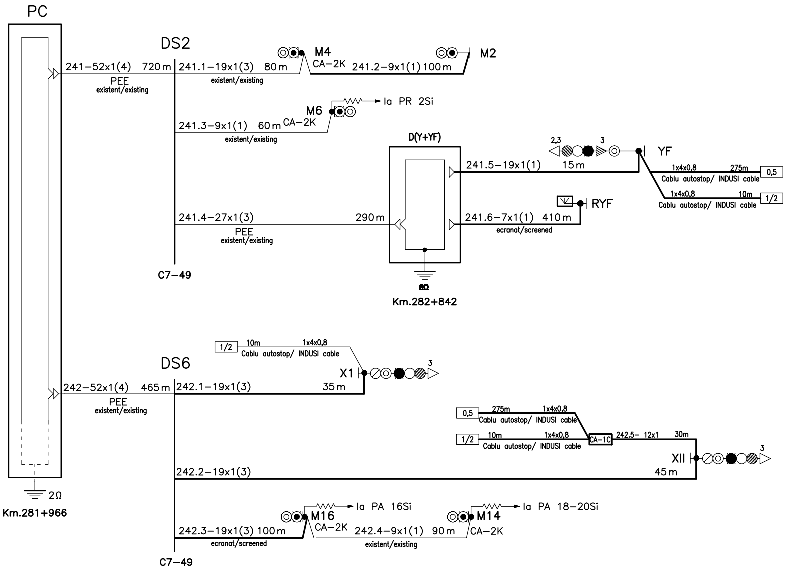
PC
DS2
241−52x1(4) 720 m
PEE
existent/existing
241.1−19x1(3) 80 m
existent/existing
M4
CA−2K
241.2−9x1(1) 100 m
M2
M6
la PR 2Si
241.3−9x1(1) 60 m
CA−2K
existent/existing
D(Y+YF)
2,3
3
YF
241.5−19x1(1) 15 m
1x4x0,8 275m
Cablu autostop/ INDUSI cable
0,5
1x4x0,8 10m
Cablu autostop/ INDUSI cable
1/2
RYF
241.4−27x1(3) 290 m
PEE
existent/existing
241.6−7x1(1) 410 m
ecranat/screened
C7−49
8Ω
Km.282+842
1/2
10m 1x4x0,8
Cablu autostop/ INDUSI cable
DS6
X1
3
242−52x1(4) 465 m
PEE
existent/existing
242.1−19x1(3) 35 m
0,5
275m 1x4x0,8
Cablu autostop/ INDUSI cable
1/2
10m 1x4x0,8
Cablu autostop/ INDUSI cable
CA−1C
242.5− 12x1 30m
XII
3
242.2−19x1(3) 45 m
2Ω
Km.281+966
la PA 16Si
la PA 18−20Si
M16
M14
242.3−19x1(3) 100 m
CA−2K
242.4−9x1(1) 90 m
CA−2K
ecranat/screened
existent/existing
C7−49

Plan de cablaj semnale cap Y − C 241,242

Cable lay−out for signal Y end

Statia: Sighisoara

EA51 01 C 21 UX SE 021 2 007 1 05/07

420x297=0.13mp

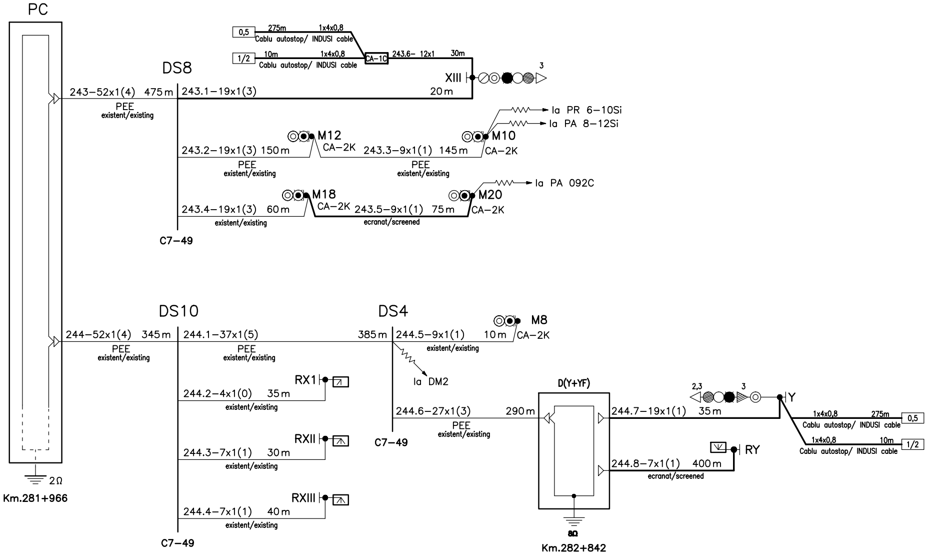
PC
DS8
0,5
275m
1x4x0,8
Cablu autostop/ INDUSI cable
1/2
10m
1x4x0,8
Cablu autostop/ INDUSI cable
CA-1C
243.6- 12x1
30m
3
XIII
243-52x1(4) 475m
243.1-19x1(3)
20m
PEE
existent/existing
la PR 6-10Si
la PA 8-12Si
M12
M10
243.2-19x1(3) 150m
CA-2K
243.3-9x1(1) 145m
CA-2K
PEE
existent/existing
PEE
existent/existing
la PA 092C
M18
M20
243.4-19x1(3) 60m
CA-2K
243.5-9x1(1) 75m
CA-2K
existent/existing
ecranat/screened
C7-49
DS10
DS4
M8
244-52x1(4) 345m
244.1-37x1(5)
385m
244.5-9x1(1) 10m
CA-2K
PEE
existent/existing
PEE
existent/existing
existent/existing
la DM2
RX1
244.2-4x1(0) 35m
existent/existing
D(Y+YF)
2,3
3
Y
244.6-27x1(3) 290m
244.7-19x1(1) 35m
1x4x0,8
275m
0,5
Cablu autostop/ INDUSI cable
1x4x0,8
10m
1/2
Cablu autostop/ INDUSI cable
PEE
existent/existing
C7-49
RXII
244.3-7x1(1) 30m
existent/existing
RY
244.8-7x1(1) 400m
ecranat/screened
2Ω
Km.281+966
RXIII
244.4-7x1(1) 40m
existent/existing
C7-49
8Ω
Km.282+842

Plan de cablaj semnale cap Y – C 243, 244
Cable lay-out for signal Y end

Statia: Sighisoara

EA51 01 C 21 UX SE 021 2 007 1 06/07

420x297=0.13mp

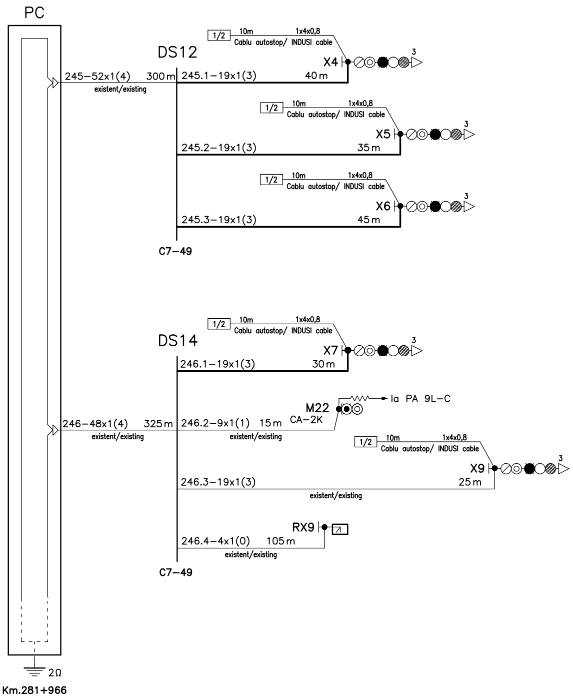
PC
DS12
1/2 10m 1x4x0,8 Cablu autostop/ INDUSI cable
X4
3
245–52x1(4) 300 m
existent/existing
245.1–19x1(3) 40 m
1/2 10m 1x4x0,8 Cablu autostop/ INDUSI cable
X5
3
245.2–19x1(3) 35 m
1/2 10m 1x4x0,8 Cablu autostop/ INDUSI cable
X6
3
245.3–19x1(3) 45 m
C7–49
DS14
1/2 10m 1x4x0,8 Cablu autostop/ INDUSI cable
X7
3
246.1–19x1(3) 30 m
M22
CA–2K
la PA 9L–C
246–48x1(4) 325 m
existent/existing
246.2–9x1(1) 15 m
existent/existing
1/2 10m 1x4x0,8 Cablu autostop/ INDUSI cable
X9
3
246.3–19x1(3) 25 m
existent/existing
RX9
246.4–4x1(0) 105 m
existent/existing
C7–49
2Ω
Km.281+966

Plan de cablaj semnale cap Y – C 245, 246
Cable lay-out for signal Y end

Statia: Sighisoara

EA51 01 C 21 UX SE 021 2 007 1 07/07

420x297=0.13mp