VEDERE A–A/A–A SECTION

Sc 1:100

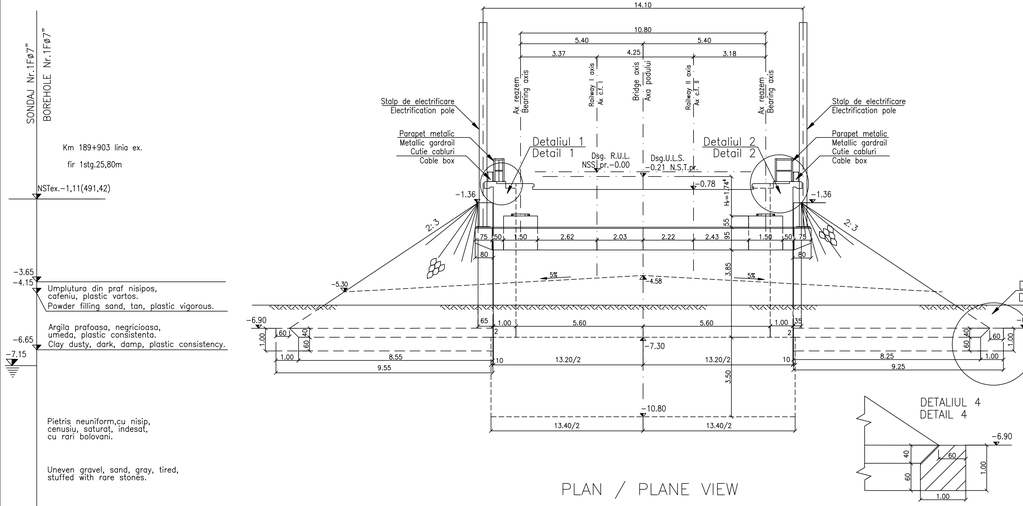

PLAN / PLANE VIEW

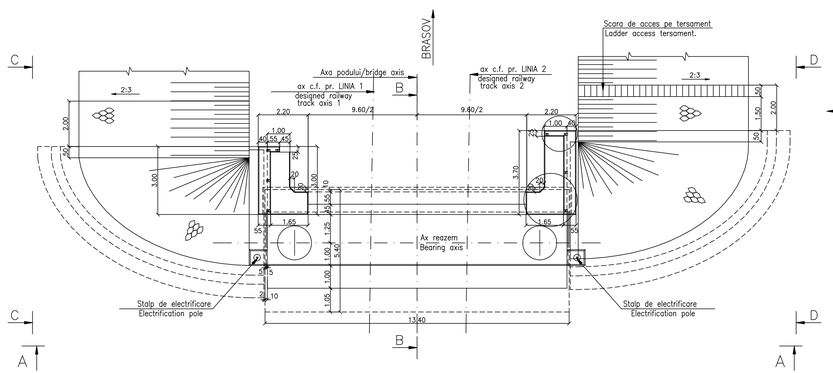

SECTIUNE / SECTION B–B

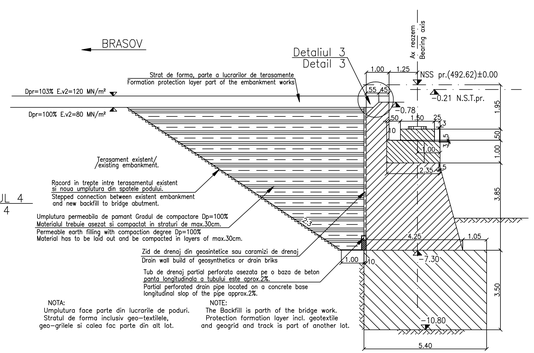

SECTIUNE / SECTION C–C

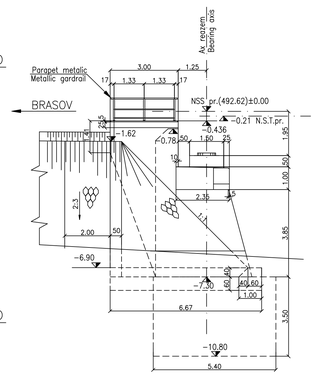

SECTIUNE / SECTION D–D

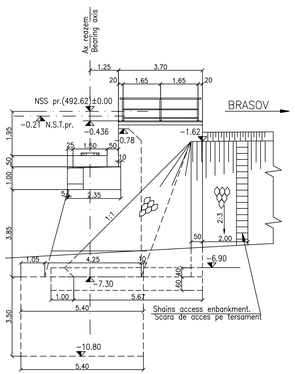

Detaliul/Detail 1

Sc 1:50

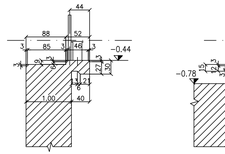

Detaliul/Detail 2

Sc 1:50

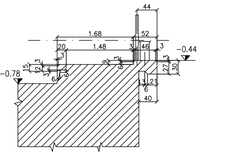

Detaliul/Detail 3

Sc 1:10

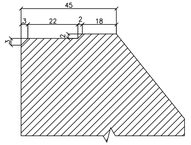

NOTA 1. Prezentul plan s–a întocmit în conformitate cu dispozitia generala.
2. Executia partilor superioare ale cuzinetilor, amplasate deasupra banchetei cuzinetilor, se va face numai dupa procurarea aparatelor de reazem.
Nivelele superioare ale cuzinetilor se vor stabili dupa procurarea aparatelor de reazem, în functie de inaltimile fiecarui tip de aparat.Executia zidurilor interoase si a zidului de garda se va face dupa asezarea tablierului pe reazeme.
3. Daca la executie se constata ca la nivelul talpii de fundatie este alt teren decat cel indicat in sondaj, sau se contata alte neconcordante intre situatia existenta pe teren si cea din proiect se va anunta proiectantul.
4. Podul corespunde la convoaiele de calcul UIC(LM 71 si SW/2).
5. La executie se vor respecta cu strictete prevederile din "Normativ pentru producerea betonului si executarea lucrarilor din beton, beton armat si beton precomprimat. Partea 1: Producerea betonului", indicativ NE 012/1–2007 si "Normativ pentru producerea betonului si executarea lucrarilor din beton, beton armat si beton precomprimat. Partea 2: Executarea lucrarilor din beton", indicativ NE 012/2–2010, iar verificarea calitatii lucrarilor si receptionarea lor se va face conform normativului C56–1985.
6. Constructia se incadreaza in categoria de importanta B (constructii de importanta deosebita), modelul 1–de asigurare a calitatii si clasa de importanta B, conform HG 766/1997.
7. Proiectul va fi verificat la exigentele A4.2; B2.2; D2.2.

NOTE: 1. This plan has been drawn up according to the general disposition.
2. The upper parts of the bearing placed over the bearing seat shall be built only after the procurement of the bearing blocks. the upper level of the bearings shall be established after the procurement of the bearing blocks depending on the height of the each bearing block type.
The reverted walls and the guard wall shall be carried out after putting the desk on the supports.
3. If the execution is found that the sole foundation is another land than that indicated in the survey, or other account discrepancies between the situation on the ground and will announce the project designer.
4. The bridge corresponds to the UIC determination convoys (LM71 and SW/2).
5. The execution will strictly comply with the provisions of "Practice code for the concrete production and works execution, reinforced and pre–stressed concrete – Part 1: Practice code for concrete production" NE 012/1–2007 and "Practice code for the concrete production and works execution, reinforced and pre–stressed concrete – Part 2: The execution of concrete works." NE 012/2–2010, and the quality and the reception of the works shall be made accordingly to Norm C 56–1985.
6. The construction has been classified in B category of importance (high important constructions), model 1–ensuring the quality and class of importance B according to G.O. 766/97.
7. The project will be checked in order to comply with the A4.2; B2.2; D2.2 requirements.

This drawing is forbidden to be copied, lent or used in other purposes than those previously approved by AREX Lider Company as its owner.
Se interzice copierea, difuzarea, împrumutarea sau utilizarea în alte scopuri, fara permisiunea AREX Lider Company ca proprietar al desenului.

LEGENDA BETOANELOR/CONCRETE LIST

Beton armat în cuzineti si in bancheta cuzinetilor
Reinforced concrete in the cushions and cushions bench
C 35/45–CEM II/A–S 42,5–(XC4+XF3+XA2)–A/C=0,50–D_{max}16–Cl 0,20

Beton armat în elevatie si in zidurile intoarse
Reinforced concrete in the elevation infrastructure and reverted walls
C 25/30–Ciment H II/A–S 42,5–(XC4+XF3)–A/C=0,50–D_{max}32–Cl 0,20

Beton simplu in fundatii:
Plain concrete in abutments foundations:
C 25/30–Ciment H II/A–S 42,5–(XF3)–A/C=0,50–D_{max}32–Cl 0,20

Beton in stratul de protectie al hidroizolatiei
Concrete in the protection layer of the waterproofing
C 25/30–Ciment II/A–S 32,5–(XC4+XF3)–A/C=0,50–D_{max}16–Cl 0,20

Beton in fundatia sferturilor de con
Concrete in the protection layer of the waterproofing
C 25/30–Ciment II/A–S 32,5–(XF1)–A/C=0,50–D_{max}32–Cl 0,20

In cazul in care temperatura in timpul turnarii este scazuta, se vor folosi cimenturile cu rezistenta initiala mare, R si aditivi accelaratori, iar in cazul turnarii pe timp calduros, cimenturile cu rezistenta initiala uzuala, N si aditivi intarzietori (conf.NE 012–99 si tabelului 2 din SR EN 197–1:2002)
When the temperature during the casting is low, cements with high initial resistance, R and accelerating additives shall be used and when it is cast during warm weather, cements with common initial resistance, N and delaying additives shall be used (according the norm NE 012–99 and table 2 for the SR EN 197–1:2002).

ATENTIE/ATENTION

Aprovizionarea aparatelor de reazem se va face inaintea executarii cuzinetilor si a banchetei acestora. In cazul in care inaltimea aparatelor de reazem aprovizionate difera fata de cea considerata in proiect se vor modifica inaltimile pe reazem corespunzator cu noile aparate.
The bearing blocks shall be supplied before building the bearings and their seats. In case the height of the supplied bearing blocks differs from that given in the project, the heights on the seats shall be adjusted so as to comply with the new devices.

Indice Index	Data Date	Modificare Modification/Revision	Proiectant Designer	Aprobat Consultant Approved Consultant	Aprobat CFR Approved CFR
D					
C					
B					
A	11.2011	Revizia 1 / 1 Revision	Cristina Vasiliu		

GUVERNUL ROMANIEI
ROMANIAN GOVERNMENT

PROIECT FINANŢAT DE UNIUNEA EURO
EUROPEAN UNION FINANCED PR

CLIENT / CLIENT

C.N.C.F. "C.F.R." - S.A.

CONSULTANT / CONSULTANT

ITALFERR GRUPPO FERROVIE DELLO STATO
Joint Venture leader
Scott Wilson
OBERMEYER PLANEN • BERATEN GmbH
TECNIC Consulting Engineers

			Date Data	Semnaturi Signature
Aprobat Approved	Şef proiect Project manager	R. Liuzza		
Aprobat Approved	Coordonator Sec.Iuna 1 Section 1 Coordinator	C. Gambelli		
Verificat Checked	Expert Cheie Checking Expert	V.Kallidromitis		

SUBCONTRACTANT / SUBCONTRACTOR

AREX TEHNOSTAT

Aprobat Approved	Responsabil Subconsultant Subconsultant Responsible	A. Dinulescu Stanciu	07.2011	
Întocmit Elaborated	Proiectant Designer	Cristina Vasiliu	07.2011	

Reabilitarea liniei de cale ferata Braşov - Simeria, parte componentă a coridorului IV Pan European, pentru circulaţia trenurilor cu viteza maximă de 160 km/h,
Tronsonul : Braşov - Sighişoara
Rehabilitation of the railway line Braşov - Simeria, component Part of the IV Pan-European Corridor, for the trains circulation with maximum speed of 160 km/h,
Section : Braşov - Sighişoara

Proiect/Project 2004/RO/16/P/PA/003

Faza / Phase: P.Th. / T.D.

Denumire desen / Drawing Title : INTERVAL / SECTION BOD - FELDIOARA
POD PESTE PARAUL VULCANITA km 190+227.440 D=45.00m
COFRAJ CULEEA BRASOV /FORMWORK PLANE (BRASOV ABUTMENT)
BRIDGE km 190+227.440 D=45.00m

Codificare / Codification System	Scara / Scale 1:100 1:50	LOT / LOT	Nr. / No 01 / 01
E A 5 1 0 1 E 0 6 B B P V 0 0 5 2 0 0 5 1			