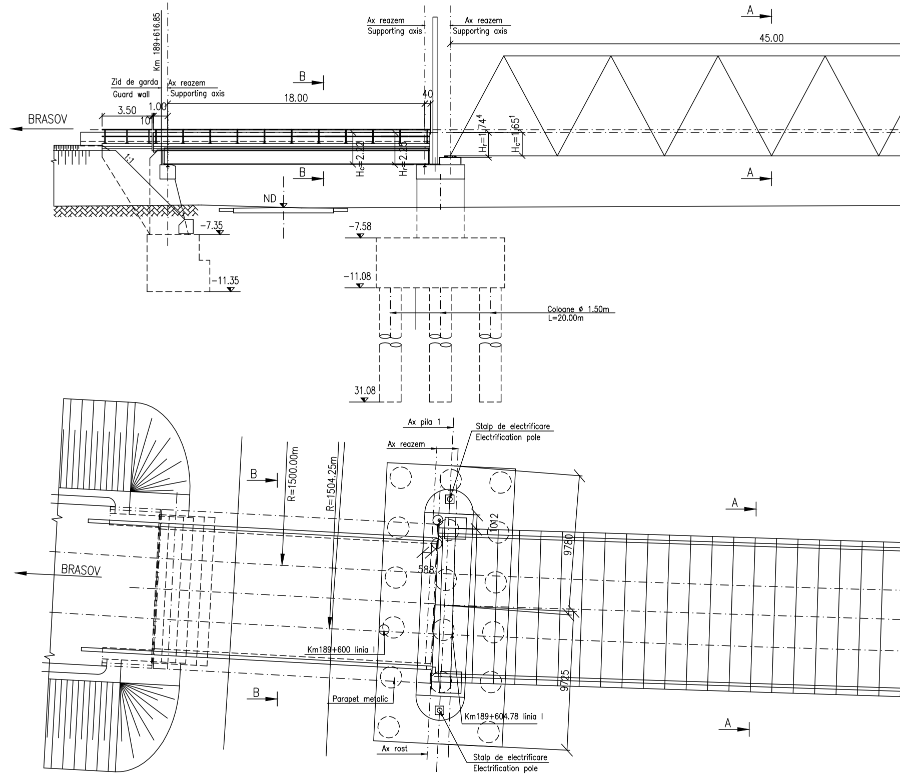
A
45.00
Ax reazem
Supporting axis
Ax reazem
Supporting axis
Km 189+616.85
B
Zid de garda
Guard wall
Ax reazem
Supporting axis
18.00
40
3.50
1.00
10
BRASOV
1:1
$H_c=2.22$
$H_r=2.25$
$H_r=1.74^4$
$H_c=1.65^1$
B
A
ND
−7.35
−7.58
−11.35
−11.08
Coloane ø 1.50m
L=20.00m
31.08
Ax pila 1
Stalp de electrificare
Electrification pole
Ax reazem
B
R=1500.00m
R=1504.25m
A
1012
9780
BRASOV
588
Km189+600 linia I
9725
B
Parapet metalic
Km189+604.78 linia I
A
Ax rost
Stalp de electrificare
Electrification pole

ELEVATIE / ELEVATION

Sc 1:200

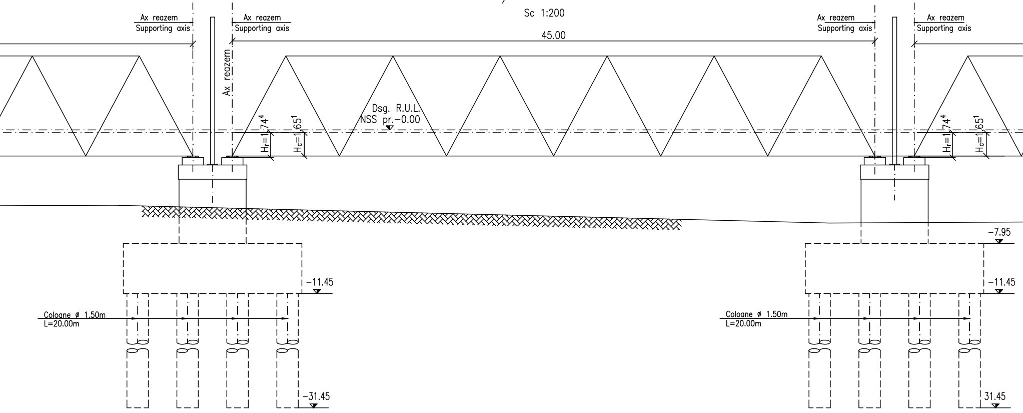
Ax reazem
Supporting axis
Ax reazem
Supporting axis
45.00
Ax reazem
Ax reazem
Supporting axis
Ax reazem
Supporting axis
Dsg. R.U.L.
NSS pr.-0.00
H_r=1.74^4
H_c=1.65^1
H_r=1.74^4
H_c=1.65^1
-7.95
-11.45
-11.45
Coloane ø 1.50m
L=20.00m
Coloane ø 1.50m
L=20.00m
-31.45
31.45

PLAN / PLANE VIEW

Sc 1:200

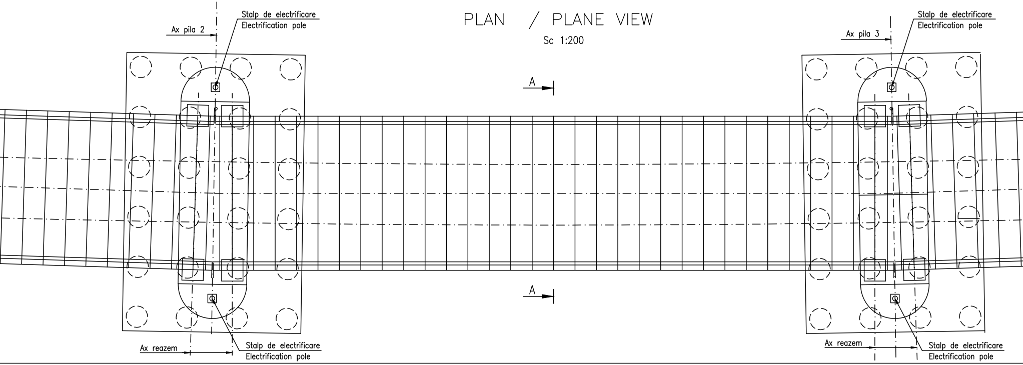
Ax pila 2
Stalp de electrificare
Electrification pole
A
Ax pila 3
Stalp de electrificare
Electrification pole
A
Ax reazem
Stalp de electrificare
Electrification pole
Ax reazem
Stalp de electrificare
Electrification pole

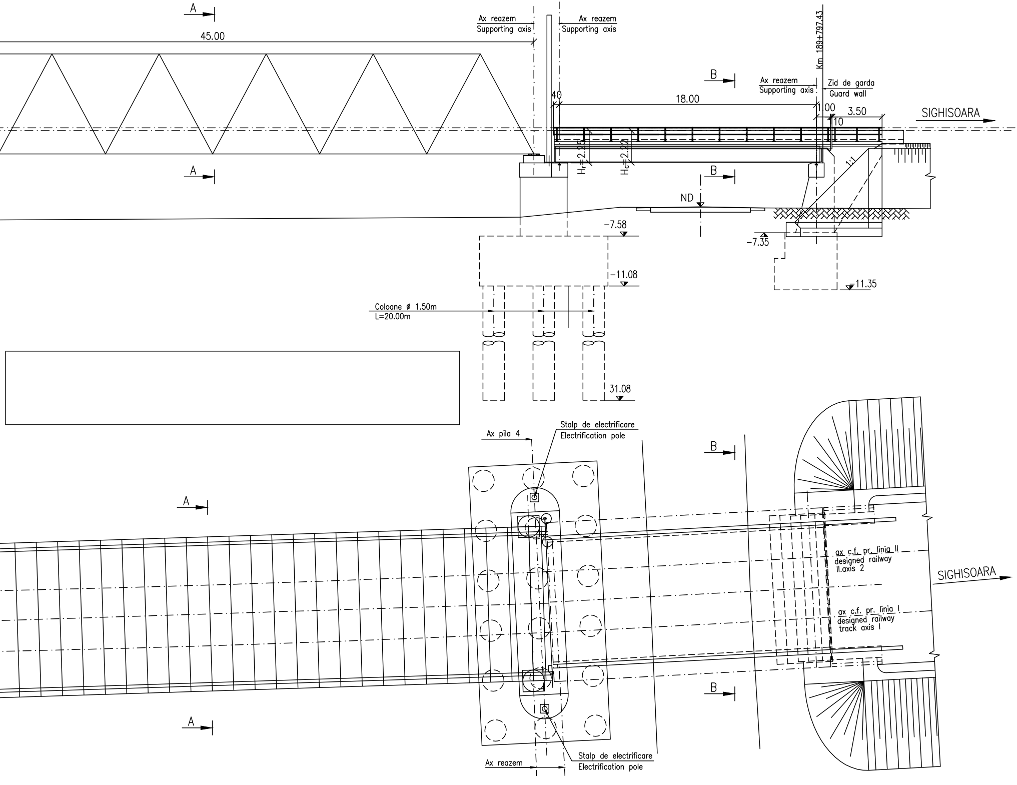
A
A
45.00
Ax reazem
Supporting axis
Ax reazem
Supporting axis
Km 189+797.43
B
B
Ax reazem
Supporting axis
Zid de garda
Guard wall
40
18.00
1.00
3.50
10
SIGHISOARA
Hr=2.55
Hc=2.22
1:1
ND
-7.58
-7.35
-11.08
-11.35
Coloane ø 1.50m
L=20.00m
31.08
Stalp de electrificare
Electrification pole
Ax pila 4
B
A
ax c.f. pr. linia II
designed railway
II.axis 2
SIGHISOARA
ax c.f. pr. linia I
designed railway
track axis I
B
A
Stalp de electrificare
Electrification pole
Ax reazem

VEDERE FRONTALA PILA 2 SI 3
PIER 2 AND 3 VIEW

Sc 1:200

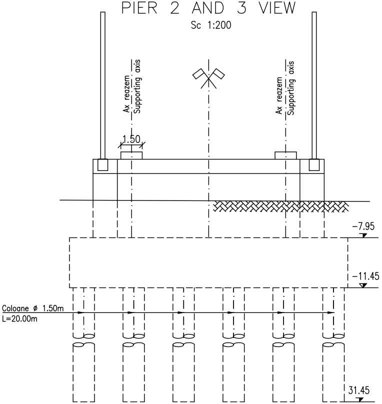
Ax reazem
Supporting axis
Ax reazem
Supporting axis
1.50
-7.95
-11.45
Coloane ø 1.50m
L=20.00m
31.45

VEDERE FRONTALA PILA 1 SI 4
PIER 1 AND 4 VIEW

Sc 1:200

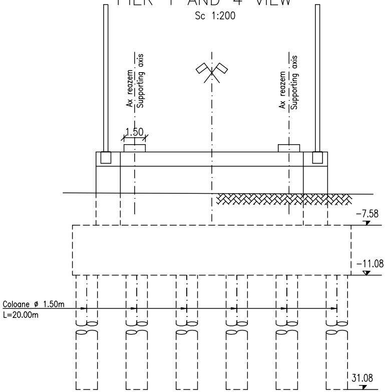
Ax reazem
Supporting axis
Ax reazem
Supporting axis
1.50
-7.58
-11.08
Coloane ø 1.50m
L=20.00m
31.08

SECTIUNE TRANSVERSALA A-A / CROSS SECTIONI

Sc 1:100

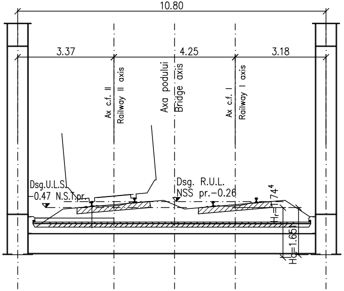
10.80
3.37
4.25
3.18
Ax c.f. II
Railway II axis
Axa podului
Bridge axis
Ax c.f. I
Railway I axis
Dsg.U.L.S.
-0.47 N.S.T.pr.
Dsg. R.U.L.
NSS pr.-0.26
74⁴
Hr
H₀=1.65

SECTIUNE TRANSVERSALA B-B
B-B CROSS SECTION

Sc 1:100

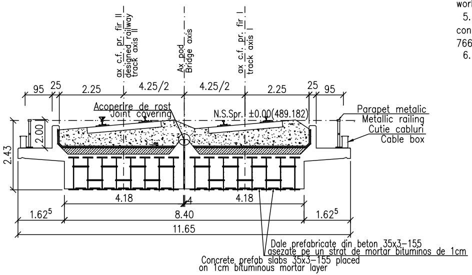
ax c.f. pr. fir II
designed railway
track axis II
Ax pod
Bridge axis
ax c.f. pr. fir I
track axis I
95
25
2.25
4.25/2
4.25/2
2.25
25
95
Acoperire de rost
Joint covering
N.S.Spr. ±0.00(489.182)
Parapet metalic
Metallic railing
Cutie cabluri
Cable box
2.00
2.43
4.18
4
4.18
1.62⁵
8.40
1.62⁵
11.65
Dale prefabricate din beton 35x3-155
asezate pe un strat de mortar bituminos de 1cm
Concrete prefab slabs 35x3-155 placed
on 1cm bituminous mortar layer

N O T A

1. Prezentul plan s-a intocmit pe baza urmatoarel
- plan de situatie;
- profil in lung;
- profil transversal;
- fisa podului;
- calcul hidraulic;
- date culese pe teren.

2. Podul corespunde la convoaiele de calcul UIC (L

3. Noul pod are urmatoarea alcatuire:
- suprastructura: tablier metalic cu cuva din beton,
- infrastructura: culei din beton armat, fundate dire

4. La executie se vor respecta cu strictete prevede
betonului si executarea lucrarilor din beton, beton ar
Producerea betonului", indicativ NE 012/1-2007 si "
executarea lucrarilor din beton, beton armat si beton
lucrarilor din beton", indicativ NE 012/2-2010, iar v
receptionarea lor se va face conform normativului C5

5. Constructia se incadreaza in categoria de import
deosebita), modelul 1 de asigurare a calitatii si clas
766/1997.

6. Proiectul va fi verificat la exigentele A4.2; B2.2;

N O T E

1. This plan has been drawn up based on the following
- Lay-out Plan;
- Longitudinal Profile;
- Cross-section Profile;
- Bridge's File;
- Hydraulic determination;
- Field Data.

2. Bridge convoys calculation corresponds to UIC (LM71

3. The new bridge has the following structure:
- Superstructure: metallic deck with concrete box for do
- Infrastructure: abutments and reinforced concrete, with

4. The execution will strictly comply with the provisio
concrete production and works execution, reinforced and
Practice code for concrete production" NE 012/1-2007
production and works execution, reinforced and pre-stres
execution of concrete works." NE 012/2-2010, and the
works shall be made accordingly to Norm C 56-1985.

5. The construction has been classified in B category o
constructions), model 1-ensuring the quality and class o
766/97.

6. The project will be checked in order to comply with

N O T A

Lungimea fisei coloanelor se va stabili in urma forarii ,,in situ" cu
incercarilor la rupere a coloanelor de proba executate in afara a
Numarul coloanelor de proba a fost stabilit conform prevederilor
Capacitatea portanta a coloanelor se va stabili conform prevede
Geotehnica, cu coeficientii pentru incercari ,,in situ".
Toate coloanele se vor verifica US.

N O T E

The length of the columns will be established based on the "in
configuration of the soil (Lithological Sheet), after the breakdo
built outside the final location.
The number of the testing columns was established complying
The columns bearing capacity shall be established complying
Geotechnical section, using the "in situ" testing coefficients.
All columns shall be checked US.

or date:

M71 si SW/2).

pentru cale dubla;
ct.
erile din "Normativ pentru producerea
mat si beton precomprimat. Partea 1:
Normativ pentru producerea betonului si
precomprimat. Partea 2: Executarea
erificarea calitatii lucrarilor si
56–1985.
tanta B (constructii de importanta
a de importanta B, conform HG

D2.2

data:

and SW/2.

uble track;
direct foundation.
ns of "Practice code for the
pre–stressed concrete – Part 1:
and "Practice code for the concrete
sed concrete – Part 2: The
quality and the reception of the

f importance (high important
f importance B according to G.O.

the A4.2; B2.2; D2.2 requirements.

identificarea fisei litologice, si in urma
mplasamentului.
din EUROCOD.
rilor din EUROCOD, sectiunea

situ" drilling, identifying the lithological
wn tests made on the testing columns

g with the provisions in EURO CODE.
with the provisions in EURO CODE,

This drawing is forbidden to be copied, lent or used in other purposes than those previously approved by AREX *Lider* Company as its owner.
Se interzice copierea, difuzarea, imprumutarea sau utilizarea in alte scopuri, fara permisiunea AREX *Lider* Company ca proprietar al desenului.

D					
C					
B					
A	11.2011	Revizia 1 1 Revision	Maria Campan		
Indice Index	Data Date	Modificare Modification/Revision	Proiectant Designer	Aprobat Consultant Approved Consultant	Aprobat CFR Approved CFR

GUVERNUL ROMANIEI
ROMANIAN GOVERNMENT

PROIECT FINANŢAT DE UNIUNEA EURO
EUROPEAN UNION FINANCED PR

CLIENT / CLIENT

C.N.C.F. "C.F.R." - S.A.

ITALFERR
GRUPPO FERROVIE DELLO STATO
Joint Venture leader

Scott Wilson

OBERMEYER
PLANEN + BERATEN GmbH

TECNIC
Consulting Engineers

CONSULTANT / CONSULTANT

			Data Date	Semnătură Signature
Aprobat Approved	Şef proiect Project manager	R. Liuzza		
Aprobat Approved	Coordonator Secţiune 1 Section 1 Coordinator	C. Gambelli		
Verificat Checked	Expert Cheie Checking Expert	V.Kallidromitis		

SUBCONTRACTANT / SUBCONTRACTOR

AREX Lider COMPANY

Aprobat Approved	Responsabil Subconsultant Subconsultant Responsible	A. Dinulescu Stanciu	09.2011	
Întocmit Elaborated	Proiectant Designer	Maria Campan	09.2011	

Reabilitarea liniei de cale ferata Braşov - Simeria, parte componentă a coridorului IV Pan European, pentru circulaţia trenurilor cu viteza maximă de 160 km/h,
Tronsonul : Braşov - Sighişoara
Rehabilitation of the railway line Braşov - Simeria, component Part of the IV Pan-European Corridor, for the trains circulation with maximum speed of 160 km/h,
Section : Braşov - Sighişoara

Proiect/Project
2004/RO/16/P/PA/003

Faza / Phase:
P.Th. / T.D.

Denumire desen / Drawing Title :

INTERVAL / SECTION BOD - FELDIOARA

Viaduct Km 189+707.180 - L=18.00m+3x45.00m+18.00m - DISPOZITIE GENERALA / GENERAL DISPOSITION

Codificare / Codification System	Scara / Scale 1:100 1:200	LOT / LOT	Nr. / No 01 / 01

EA51 01 C 06 PA PV 00 4 0 002 1

297x1730