## VEDERE A–A / A–A VIEW

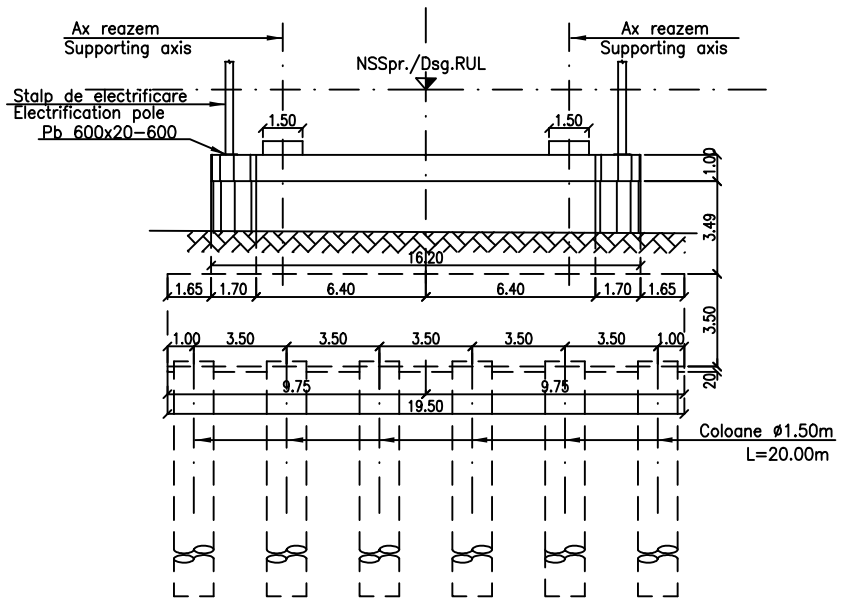


## SECTIUNE B–B/B–B SECTION

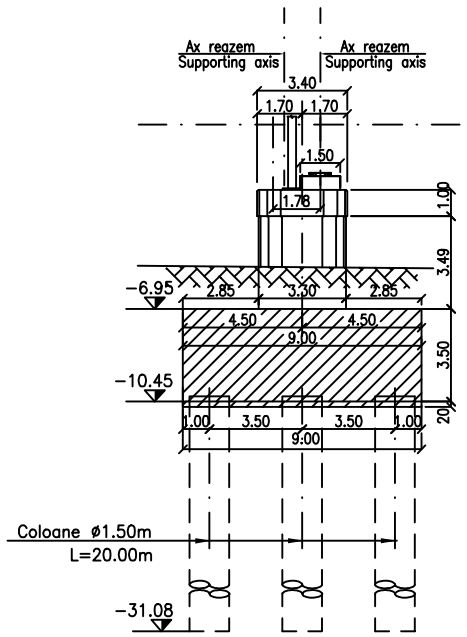


## SECTIUNE C–C/C–C SECTION

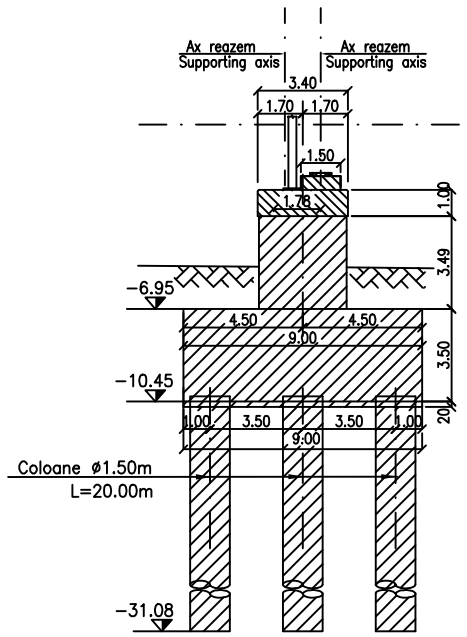


## ATENTIE/ATENTION

Aprovizionarea aparatelor de reazem se va face inaintea executarii cuzinetilor si a banchetei acestora. In cazul in care inaltimea aparatelor de reazem aprovizionate difera fata de cea considerata in proiect se vor modifica inaltimile pe reazem corespunzator cu noile aparate.

The bearing blocks shall be supplied before building the bearings and their seats. In case the height of the supplied bearing blocks differs from that given in the project, the heights on the seats shall be adjusted so as to comply with the new devices.

## VEDERE IN PLAN / PLAN VIEW

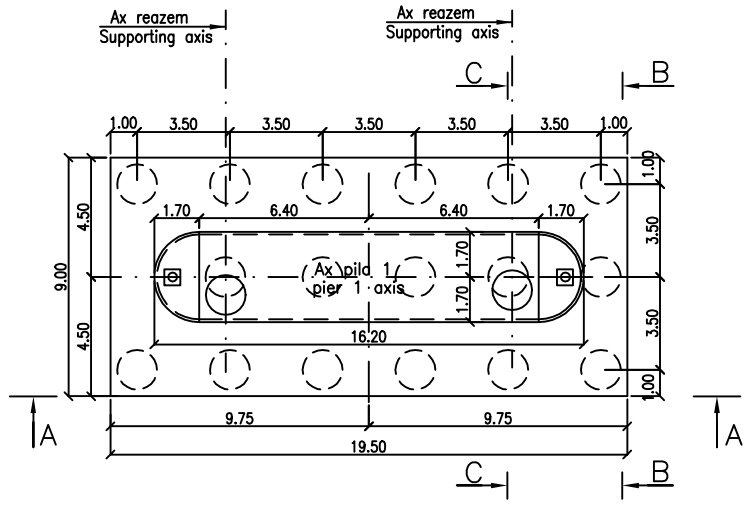


## LEGENDA BETOANELOR/CONCRETE LIST

Beton armat în cuzineti si in bancheta cuzinetilor
Reinforced concrete in the cushions and cushions bench
C 35/45–CEM I/A–S 52,5–(XC4+XF3+XA2)–A/C=0,50–$D_{max}$16–Cl 0,20

Beton armat in fundatii indirecte(coloane si radiere) si in elevatii:
Plain concrete in abutments foundations:
C 25/30–CEM H II/A–S 42,5–(XC4+XF3)–A/C=0,50–$D_{max}$32–Cl 0,20

Beton de egalizare
Concrete in the protection layer of the waterproofing
C 25/30–CEM II/A–S 32,5–(XF3)–A/C=0,55–$D_{max}$16–Cl 0,20

In cazul in care temperatura in timpul turnarii este scazuta, se vor folosi cimenturile cu rezistenta initiala mare, R si aditivi acceleratori, iar in cazul turnarii pe timp calduros, cimenturile cu rezistenta initiala uzuala, N si aditivi intarzietori (conf.NE 012/2–2010 si tabelului 2 din SR EN 197–1:2002)

When the temperature during the casting is low, cements with high initial resistance,R and accelerating additives shall be used and when it is cast during warm weather, cements with common initial resistance, N and delaying additives shall be used(according the norm NE012/2–2010 and table 2 for the SR EN197–1:002)

## NOTA:

1. Prezentul plan s–a intocmit in conformitate cu dispozitia generala
2. Convoaiele de calcul pentru infrastructura sunt UIC(LM 71 si SW/2.
3. La executie se vor respecta cu strictete prevederile din "Normativ pentru producerea betonului si executarea lucrarilor din beton, beton armat si beton precomprimat. Partea 1: Producerea betonului", indicativ NE 012/1–2007 si "Normativ pentru producerea betonului si executarea lucrarilor din beton, beton armat si beton precomprimat. Partea 2: Executarea lucrarilor din beton", indicativ NE 012/2–2010, iar verificarea calitatii lucrarilor si receptionarea lor se va face conform normativului C56–1985.
4. Constructia se incadreaza in categoria de importanta B (constructii de importanta deosebita), modelul 1–de asigurare a calitatii si clasa de importanta B, conform HG 766/1997.
5. Proiectul va fi verificat la exigentele A4.2; B2.2; D2.2.

## NOTE:

1. This plan has been drawn up according to the general disposition.
2. The bridge corresponds to the UIC determination convoys (LM71 and SW/2).
3. The execution will strictly comply with the provisions of "Practice code for the concrete production and works execution, reinforced and pre–stressed concrete – Part 1: Practice code for concrete production" NE 012/1–2007 and "Practice code for the concrete production and works execution, reinforced and pre–stressed concrete – Part 2: The execution of concrete works." NE 012/2–2010, and the quality and the reception of the works shall be made accordingly to Norm C 56–1985.
4. The construction has been classified in B category of importance (high important constructions), model 1–ensuring the quality and class of importance B according to G.O. 766/97.
5. The project will be checked in order to comply with the A4.2; B2.2; D2.2 requirements.

This drawing is forbidden to be copied, lent or used in other purposes than those previously approved by AREX Lider Company as its owner.
Se interzice copierea, difuzarea, imprumutarea sau utilizarea in alte scopuri, fara permisiunea AREX Lider Company ca proprietar al desenului.

| Indice Index | Data Date | Modificare Modification/Revision | Proiectant Designer | Aprobat Consultant Approved Consultant | Aprobat CFR Approved CFR |
|---|---|---|---|---|---|
| D | | | | | |
| C | | | | | |
| B | | | | | |
| A | 11.2011 | Revizia 1<br>1 Revision | Cristina Vasiliu | | |

\pxqc;GUVERNUL ROMANIEI
ROMANIAN GOVERNMENT

PROIECT FINANȚAT DE UNIUNEA EUROPEANĂ
EUROPEAN UNION FINANCED PROJECT

\pxqc;CLIENT / CLIENT

\pxqc;C.N.C.F. "C.F.R." - S.A.

ITALFERR GRUPPO FERROVIE DELLO STATO
Joint Venture leader

Scott Wilson

OBERMEYER PLANEN + BERATEN GmbH

TECNIC Consulting Engineers

\pxqc;CONSULTANT / CONSULTANT

| | | | Data Date | Semnătură Signature |
|---|---|---|---|---|
| Aprobat Approved | Şef proiect Project manager | \pxqc;R. Liuzza | | |
| Aprobat Approved | Coordonator Secţiune 1 Section 1 Coordinator | \pxqc;C. Gambelli | | |
| Verificat Checked | Expert Chele Checking Expert | V. Kalidromitis | | |

SUBCONTRACTANT / SUBCONTRACTOR

| | | | | |
|---|---|---|---|---|
| Aprobat Approved | \pxqc;Responsabil Subconsultant Subconsultant Responsible | \pxql;A. Dinulescu Stanciu | 10.2011 | |
| Întocmit Elaborated | Proiectant Designer | Cristina Vasiliu | 10.2011 | |

Reabilitarea liniei de cale ferata Braşov - Simeria, parte componentă a coridorului IV Pan European, pentru circulaţia trenurilor cu viteza maximă de 160 km/h,
**Tronsonul : Braşov - Sighişoara**
Rehabilitation of the railway line Braşov - Simeria, component Part of the IV Pan-European Corridor, for the trains circulation with maximum speed of 160 km/h,
**Section : Braşov - Sighişoara**

*Proiect/Project*
*2004/RO/16/P/PA/003*

Faza / Phase:
P.Th./ T.D.

Denumire desen / Drawing Title :

# INTERVAL / SECTION BOD - FELDIOARA
# Viaduct Km 189+707.180 - L=18.00m+3x45.00m+18.00m - PLAN COFRAJ PILA 1 / 1 CELL DECKING PLAN

| Codificare / Codification System | | | | |