ELEVATIE GRINDA METALICA TIP 1
ELEVATION OF THE METALLIC GIRDER TYPE 1
SC.1:20

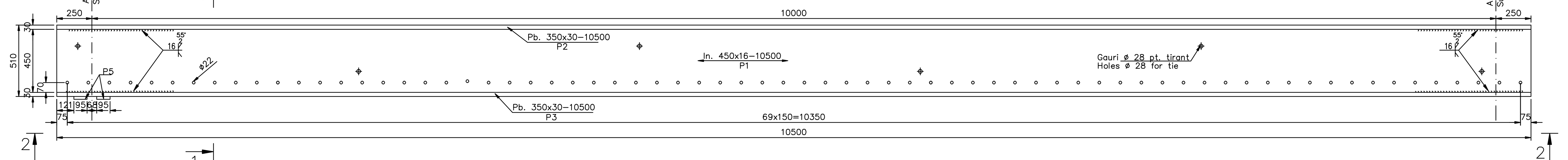

ELEVATIE GRINDA METALICA TIP 2
ELEVATION OF THE METALLIC GIRDER TYPE 2
SC.1:20

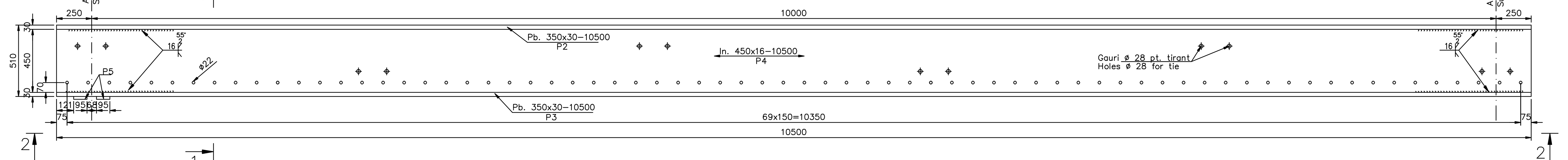

DETALII PENTRU INIMA GRINZII METALICE TIP 1
(Pozitia gaurilor pentru distantieri si armaturi transversale)
DETAILS FOR THE METALLIC GIRDER WEB TYPE 1
(Holes position for distance pieces and transversal reinforcemental)
SC.1:20

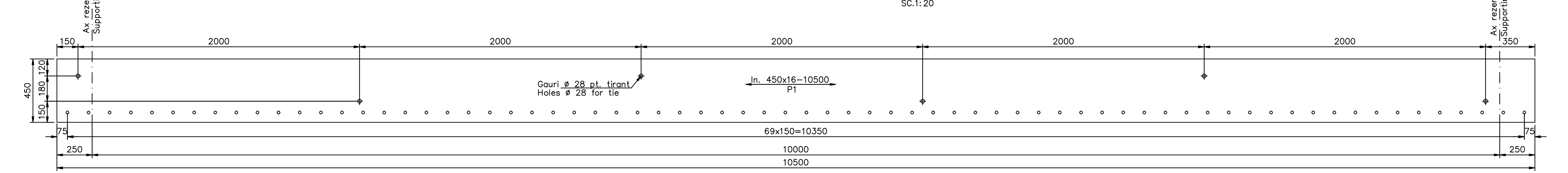

DETALII PENTRU INIMA GRINZII METALICE TIP 2
(Pozitia gaurilor pentru distantieri si armaturi transversale)
DETAILS FOR THE METALLIC GIRDER WEB TYPE 2
(Holes position for distance pieces and transversal reinforcemental)
SC.1:20

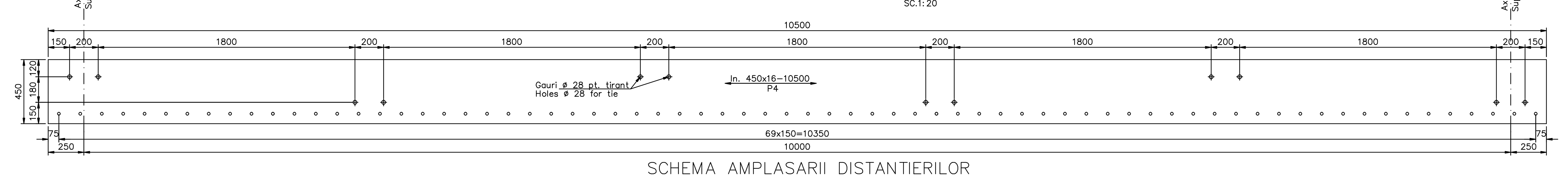

VEDERE 2–2
VIEW 2–2
SC.1:20

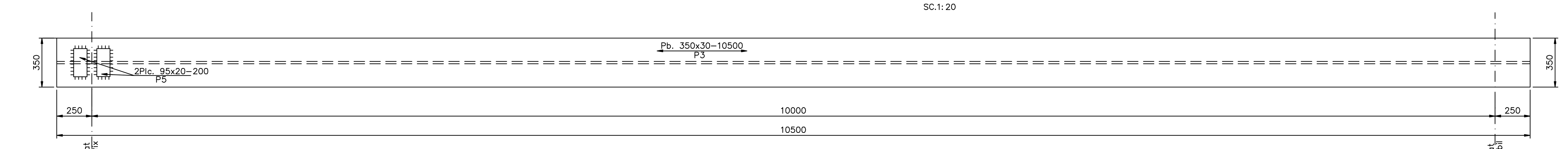

NOTA/NOTE

Placutele de la aparatele de reazem se vor samfrena cu un unghi de 60°.
Gaurile din inima pentru armatura de rezistenta vor fi alezate.

The plates of the bearing blocks will be chamfered at an angle of 60°.
The web holes for the strong reinforcements will be bored.

DETALIU DE MONTARE PLACUTE APARAT DE REAZEM FIX
DETAIL TO MOUNT THE FIXED BEARING BLOCK PLATES
sc. 1:10

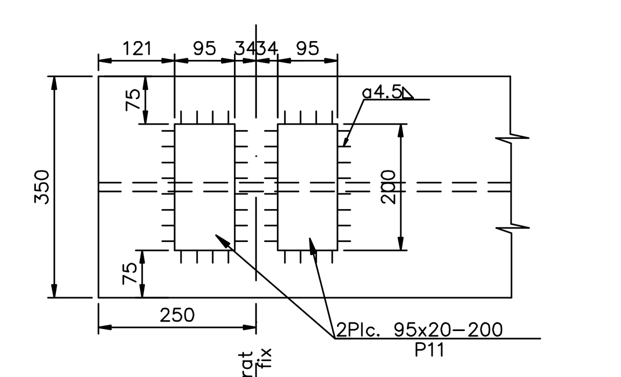

ELEMENTE DE ASAMBLARE
–Piulita M24 STAS 4971–88 Clasa de precizie "C"
–Saiba STAS 5200/4–91–24–OL 34

DETALIU DE PRINDERE A GRINZILOR METALICE
DETAIL FOR METALLIC GIRDERS FASTENING
SC.1:10

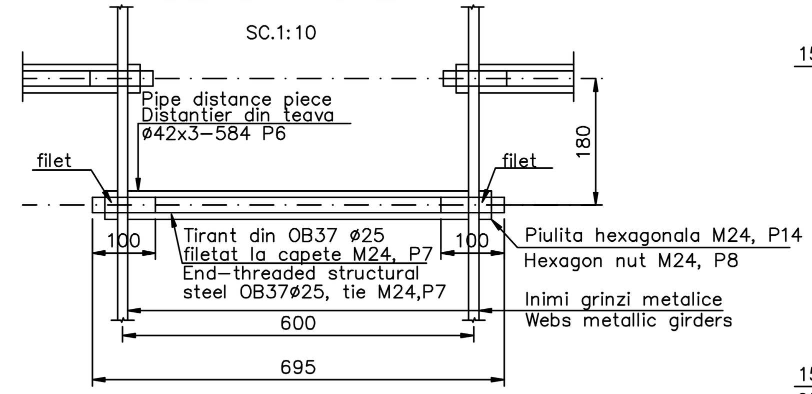

ASSEMBLY ELEMENTS
–Nut M24 STAS 4971–Precision class "C"
–Washer STAS 5200/4–91–24–OL 34

SCHEMA AMPLASARII DISTANTIERILOR
SKETCH FOR THE DISTANCE PIECES LOCATION
SC.1:100

BRASOV ← → SIGHISOARA

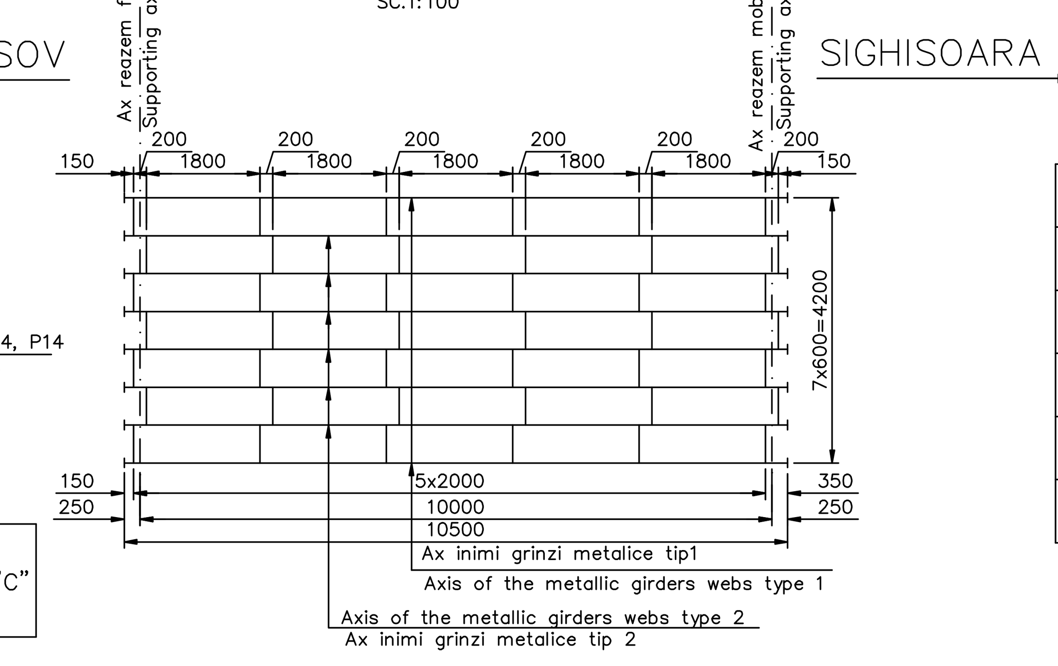

EXTRAS DE MATERIAL PENTRU SOLIDARIZAREA GRINZILOR METALICE PENTRU UN TABLIER DE CALE FERATA SIMPLA
TABLE OF MATERIALS TO JOIN THE METALLIC GIRDERS FOR SINGLE TRACK RAILWAY BRIDGE DECK

Poz.	Denumire	Dimensiuni	Nr. buc. asemenea	Greutate OL37 EP		
				kg/ml	kg/buc.	Total(kg)
P6	Distantier teava Pipe distance piece	ø42x3–584	42	2.88	1.68	71
P7	Tirant S235 Threaded S235	ø25, L=695	42	3.85	2.68	113
P8	Piulite Nuts	M24	84	–	0.10	8
P9	Saibe Washers	M24	84	–	0.023	2
					Total(kg)	200

TOTAL POD (2 TABLIERE): 2 x 200kg=400kg
TOTAL BRIDGE (2 DECKS): 2 x 200kg=400kg

SECTIUNE 1–1
1–1 SECTION
sc. 1:10

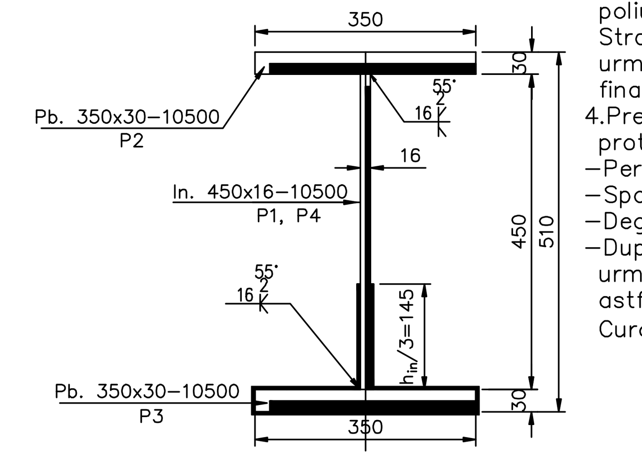

MATERIALE
(– OL37 EP STAS 12187–88 elementele grinzilor metalice.)
– $S275J_3G_3$ EN 10025/2004

EXTRAS DE MATERIAL PENTRU O GRINDA METALICA TIP 1 OL37–EP
MEASURING MATERIAL FOR UNE METALLIC GIRDERS TYPE 1 OL37–EP

Poz.	Denumire	Dimensiuni	Nr. buc. asemenea	Greutate OL37 EP		
				kg/ml	kg/buc.	Total(kg)
P1	Inima	450x16–10500	1	56.53	593.40	595
P2	Platbanda superioara	350x30–10500	1	82.45	865.60	866
P3	Platbanda inferioara	350x30–10500	1	82.45	865.60	866
P5	Placute ap. fixt	95x20–200	2	14.92	2.98	6
				Total(kg)		2333
				Sudura 2%		47
				Total(kg)		2380

TOTAL PENTRU UN TABLIER: 2 grinzi x 2380kg=4760kg
TOTAL PENTRU 2 TABLIERE: 2 x 2 grinzi x 2380kg=9520kg
TOTAL FOR 1 DECK: 2 girders x 2380kg=4760kg
TOTAL FOR 2 DECKS: 2 x 2 girders x 2380kg=9520kg

EXTRAS DE MATERIAL PENTRU O GRINDA METALICA TIP 2 OL37–EP
MEASURING MATERIAL FOR UNE METALLIC GIRDERS TYPE 2 OL37–EP

Poz.	Denumire	Dimensiuni	Nr. buc. asemenea	Greutate OL37 EP		
				kg/ml	kg/buc.	Total(kg)
P4	Inima	450x16–10500	1	56.53	593.40	595
P2	Platbanda superioara	350x30–10500	1	82.45	865.60	866
P3	Platbanda inferioara	350x30–10500	1	82.45	865.60	866
P5	Placute ap. fixt	95x20–200	2	14.92	2.98	6
				Total(kg)		2333
				Sudura 2%		47
				Total(kg)		2380

TOTAL PENTRU UN TABLIER: 6 grinzi x 2380kg=14280kg
TOTAL PENTRU 2 TABLIERE: 2 x 6 grinzi x 2380kg=28560kg
TOTAL FOR 1 DECK: 6 girders x 2380kg=14280kg
TOTAL FOR 2 DECKS: 2 x 6 girders x2380kg=28560kg

(TOTAL OL37–EP=38100kg)
TOTAL $S275J_3G_3$=38100kg

NOTA

1.La executia in uzina a grinzilor metalice sudate se vor respecta cu strictete prevederile STAS 9407–75.
2.In uzina se va aplica o protectie anticoroziva pe talpile inferioare si pe o treime din inima grinzilor metalice.
3. Protectia anticoroziva se va executa dintr–un strat de baza alcatuit dintr–o pelicula de zinc de 80µm grosime si doua straturi de invelis poliuretanic, fiecare de 85µm.
Stratul de baza si un invelis poliuretanic se vor aplica in uzina, urmand ca ultimul strat poliuretanic sa fie aplicat pe santier dupa finalizarea lucrarilor la suprastructura.
4.Pregatirea suprafetelor metalice in vederea aplicarii procedeelor de protectie anticoroziva se face prin:
–Perierea de rugina cu ajutorul unor perii de sarma.
–Spalarea suprafetelor metalice.
–Degresarea cu solventi organici prin stergere sau cu emulsii.
–Dupa degresare se spala cu jet de apa pentru indepartarea urmelor de detergent. Solutia pentru degresare va fi aleasa astfel incat sa nu afecteze mediul.
Curatirea suprafetelor se va face conform gradului SA 1 1/2.

NOTE

1.The prvisions STAS 9407–75 will be stricthy observed when the welded metallic girders are manufactered in the factory.
2.In the plant, corrosion protection will be applied on the lower flanges and on one third of the web of metallic girders.
3.The protection against corrosion will consist in a primary layer made of a zinc membrane (80µm thickness) and two polyurethane covering layer, each of 85µm thickness.
The primary layer and the first polyurethane covering layer will be applied in the factory and the second polyurethane layer will be applied on site, after completing the superstructure works.
finalizarea lucrarilor la suprastructura.
4.Preparing the metallic surfaces in order to apply the dorrosion–proof procedures shall be made by:
–Rust removal using wire brushes.
–Washing the metallic surfaces.
–Organic solvent degreasing by wiping or using emulsions.
–After degreasing, the surface is washed by water jet to eliminate the detergent stains. The solution selected for degreasing shall not affect the environment.
Cleaning the surfaces is made according to the SA 1 1/2.

Se interzice copierea, difuzarea, imprumutarea sau utilizarea in alte scopuri, fara permisiunea AREX Lider Company ca proprietar al desenului.
This drawing is forbidden to be copied, lent or used in other purposes than those previously approved by AREX Lider Company as its owner.

Indice Index	Data Date	Modificare Modification/Revision	Proiectant Designer	Aprobat Consultant Approved Consultant	Aprobat CFR Approved CFR
D					
C					
B					
A	11.2011	Revizia 1 1 Revision	Campan Maria		

GUVERNUL ROMANIEI
ROMANIAN GOVERNMENT

PROIECT FINANŢAT DE UNIUNEA EUROPEANĂ
EUROPEAN UNION FINANCED PROJECT

CLIENT / CLIENT
C.N.C.F. "C.F.R." - S.A.

ITALFERR GRUPPO FERROVIE DELLO STATO Joint Venture leader
Scott Wilson
OBERMEYER PLANEN + BERATEN GmbH
TECNIC Consulting Engineers

CONSULTANT / CONSULTANT			Data Date	Semnătură Signature
Aprobat Approved	Şef proiect Project manager	R. Liuzza		
Aprobat Approved	Coordonator Secţiune 1 Section 1 Coordinator	C. Gambelli		
Verificat Checked	Expert Cheie Checking Expert	V. Kallidromitis		

SUBCONTRACTANT / SUBCONTRACTOR
AREX Lider COMPANY

Aprobat Approved	Responsabil Subconsultant Subconsultant Responsible	A. Dinulescu Stanciu	08.2011	
Întocmit Elaborated	Proiectant Designer	Campan Maria	08.2011	

Reabilitarea liniei de cale ferata Braşov - Simeria, parte componentă a coridorului IV Pan European, pentru circulaţia trenurilor cu viteza maximă de 160 km/h,
Tronsonul : Braşov - Sighişoara
Rehabilitation of the railway line Braşov - Simeria, component Part of the IV Pan-European Corridor, for the trains circulation with maximum speed of 160 km/h,
Section : Braşov - Sighişoara

Proiect/Project
2004/RO/16/P/PA/003

Faza / Phase:
P.Th. / T.D.

Denumire desen / Drawing Title :

STATIA FELDIOARA / STATION FELDIOARA
POD Km.192+526.157 L=10.00m/GRINZI METALICE–TABLIER 2
BRIDGE Km.192+526.157 L=10.00m/METALLIC GIRDERS–DECK 2

Codificare / Codification System	Scara / Scale	LOT / LOT	Nr. / No
	1:20;1:10;1:100		01 / 01

EA51 01 E 07 BC PV 00 7 3 007 1