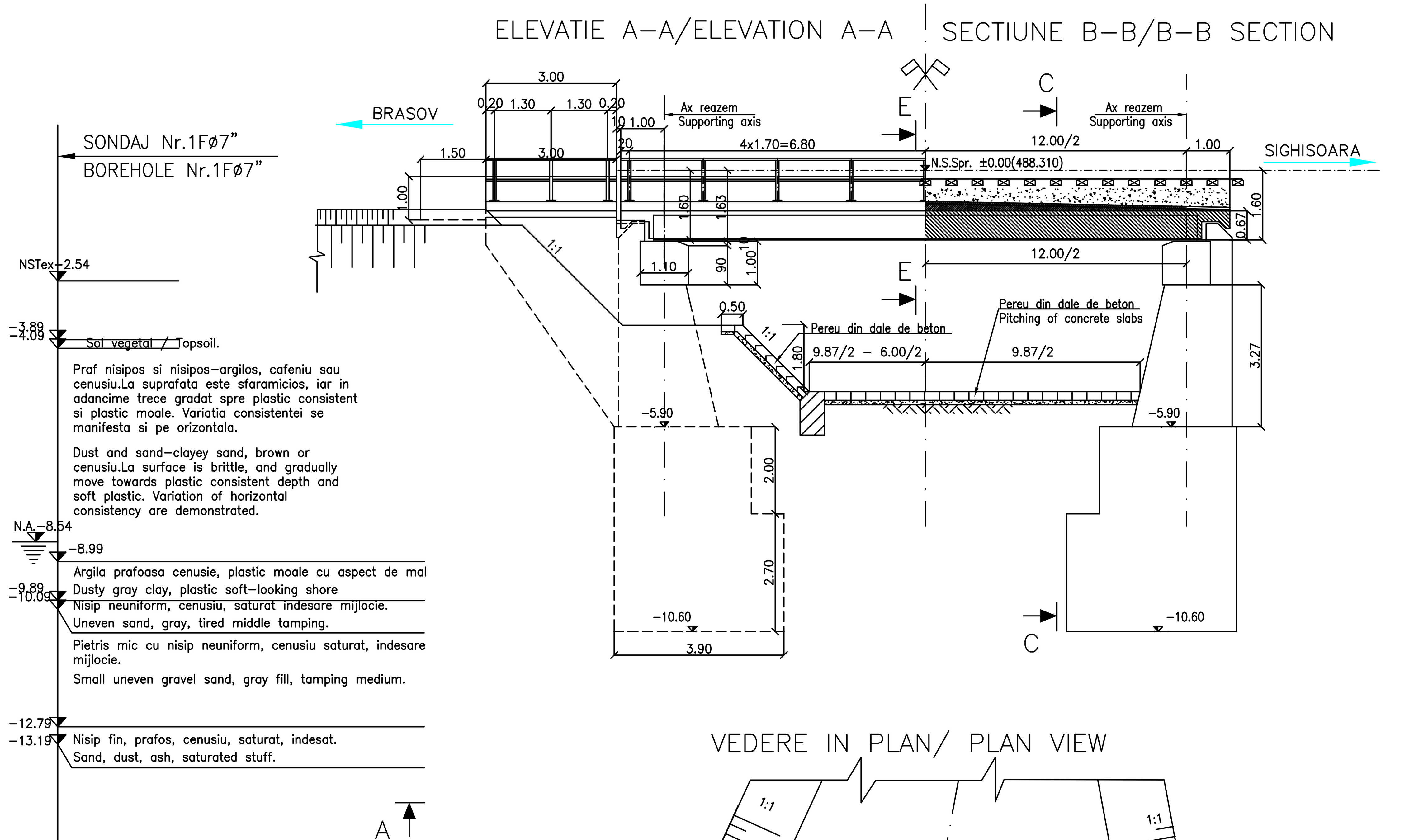

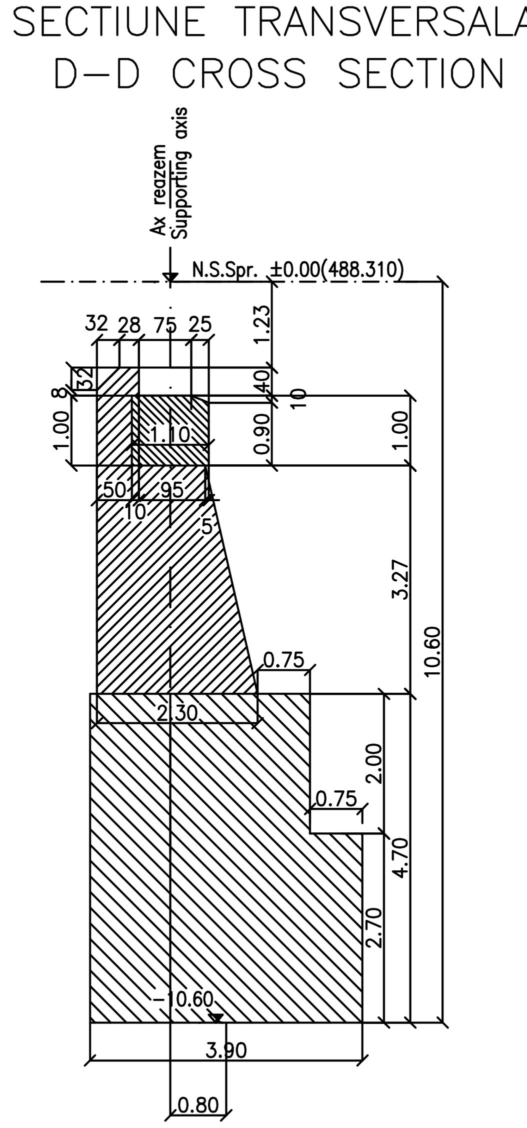

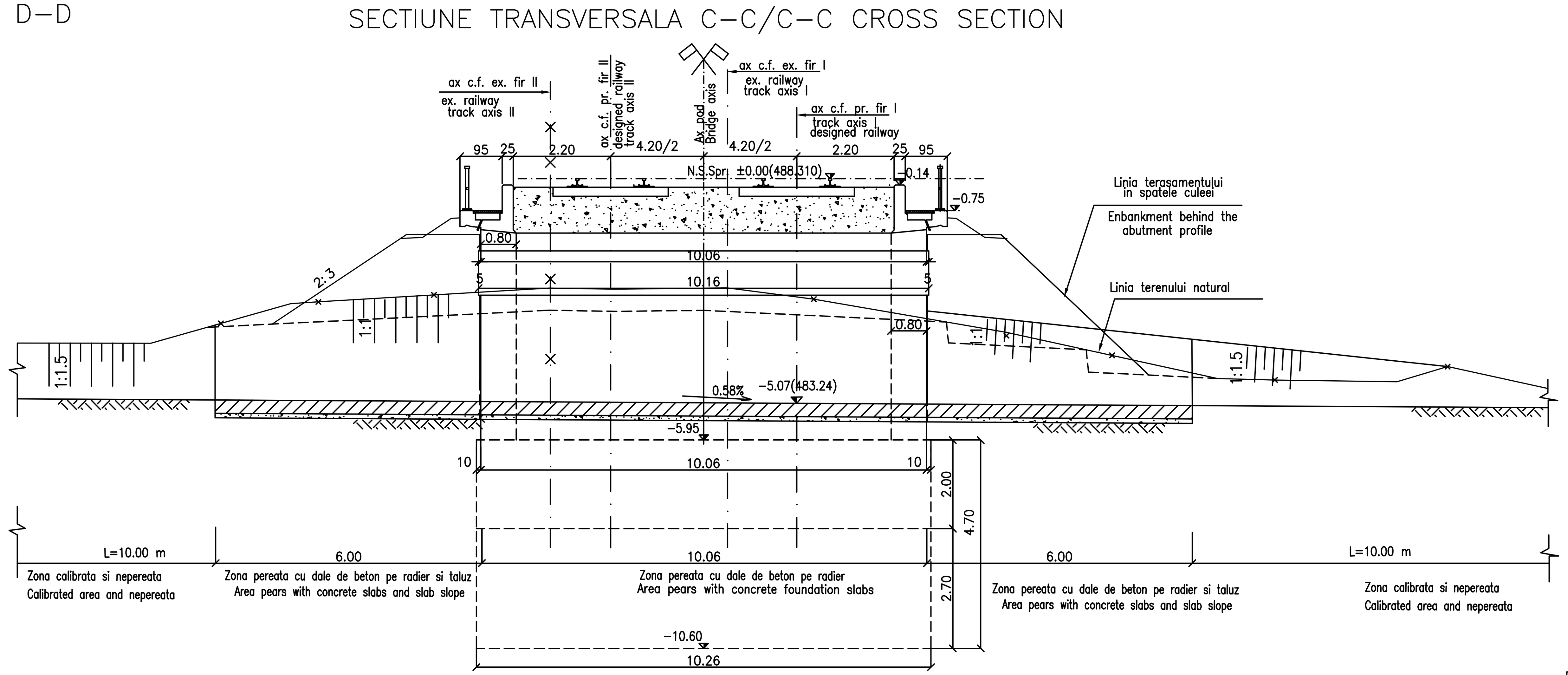

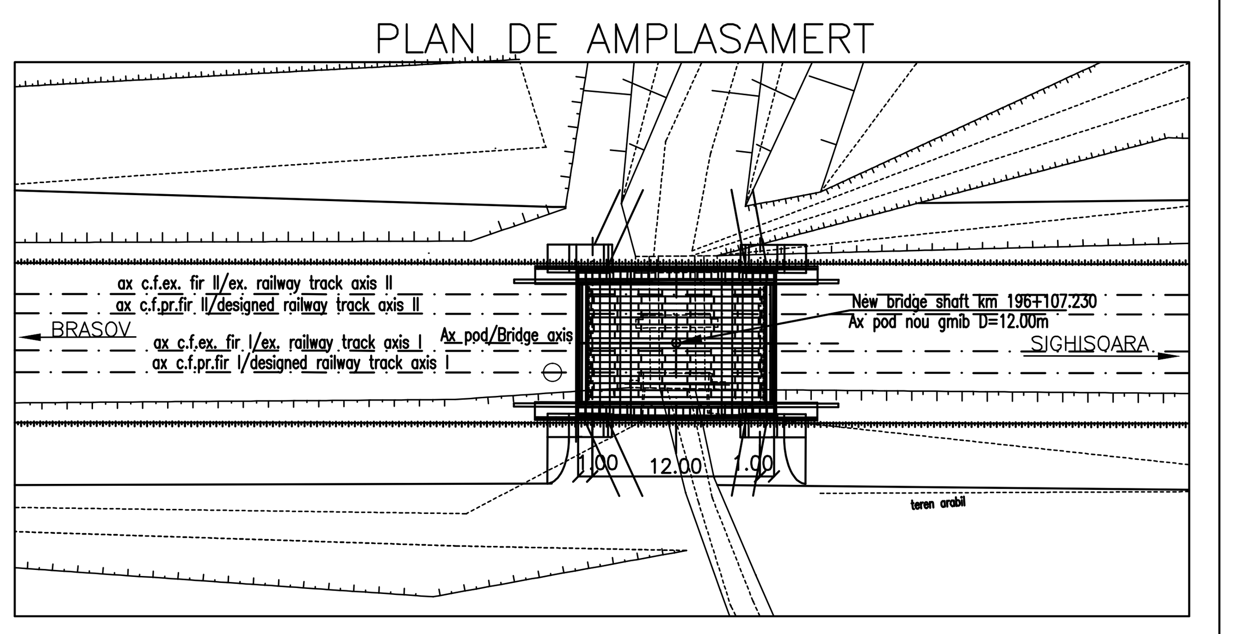

DATE HIDRAULICE		HIDRAULIC DATA	
Inaltimea de apa	h=1.56m	Hidraulic height	h=1.56m
Perimetrul udat	P=12.20m	Perimeter	P=12.20m
Aria udata	A=14.79m	Surface	A=14.79m
Vapa de curgere a apei	4.00m/s	Vater flow speed	s=4.00m/s

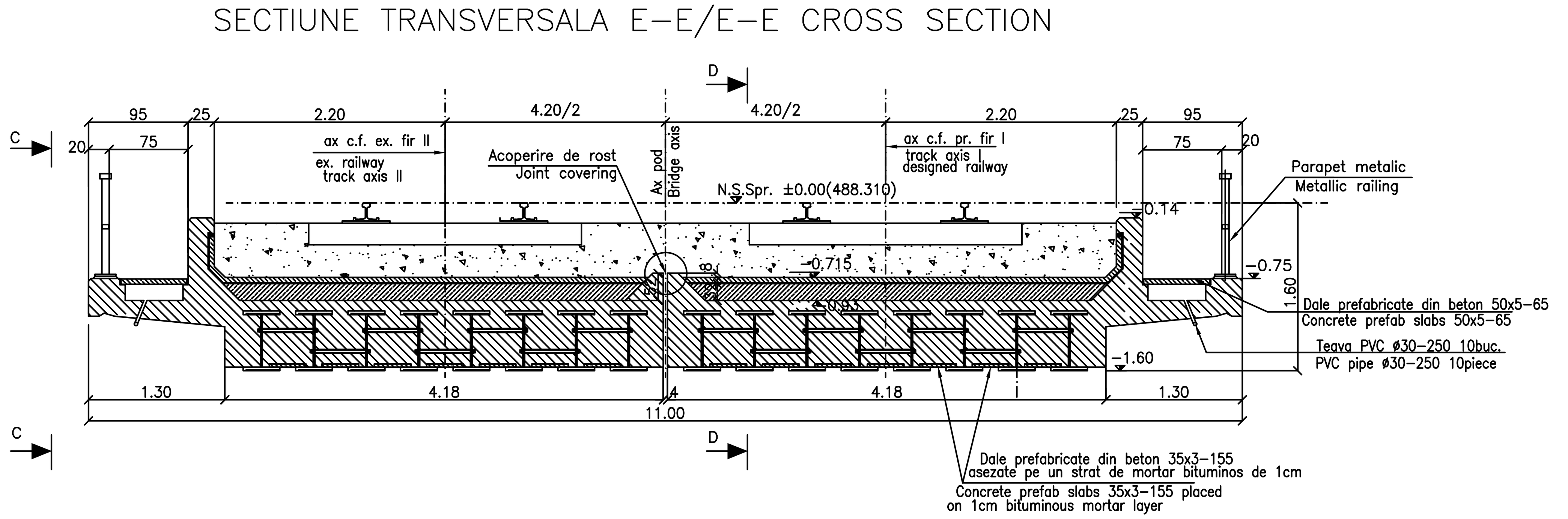

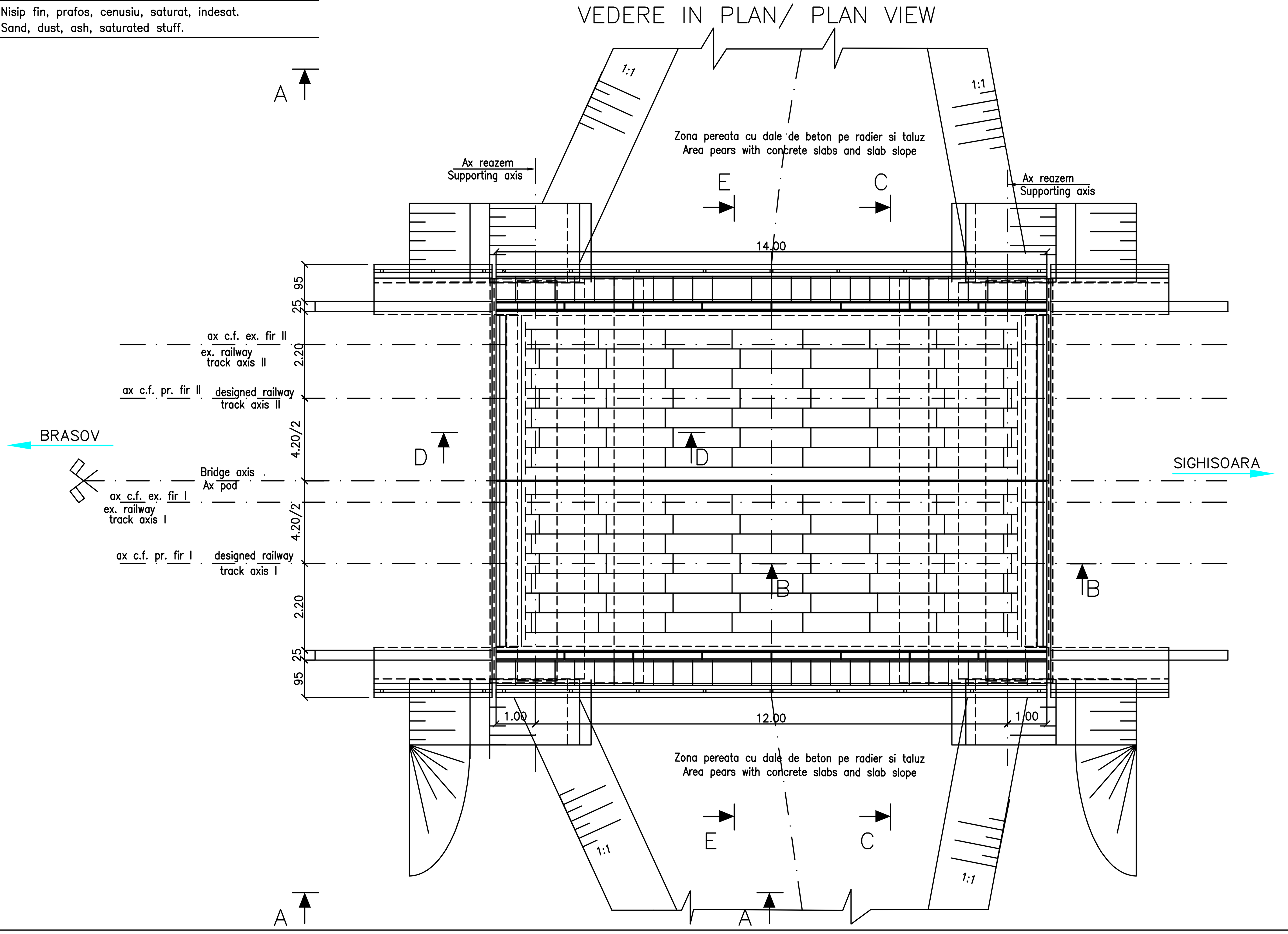

TITLUL PLANŞEI /PLAN TITLE		COD/CODE																				
		a				b		c	d		e		f		h		j	g	i			k
PLANURI TIP LA PODURI																						
DETAILS FOR WATERPROOFING AND JOINT COVERING	DETALII HIDROIZOLATII SI ROSTURI	E	A	5	1	0	1	E	0	0	Q	K	P	V	0	0	0	0	0	0	3	0

N O T A

1. Prezentul plan s-a intocmit pe baza urmatoarelor date:
- plan de situatie;
- profil in lung;
- profil transversal;
- fisa podului;
- calcul hidraulic;
- date culese pe teren.

2. Podul corespunde la convoaiele de calcul UIC (LM71 si SW/2).
3. Noul pod are urmatoarea alcatuire:
- suprastructura: tablier din grinzi metalice inglobate in beton, pentru cale dubla;
- infrastructura: culei din beton armat, fundate direct.

4. Detaliile privind amenajarea albiei sunt prezentate in planul de situatie.
5. Daca la executie se vor constata neconcordante intre situatia existenta pe teren si cea din proiect se va anunta proiectantul.
6. La executie se vor respecta cu strictete prevederile din "Normativ pentru producerea betonului si executarea lucrarilor din beton, beton armat si beton precomprimat. Partea 1: Producerea betonului", indicativ NE 012/1-2007 si "Normativ pentru producerea betonului si executarea lucrarilor din beton, beton armat si beton precomprimat. Partea 2: Executarea lucrarilor din beton", indicativ NE 012/2-2010, iar verificarea calitatii lucrarilor si receptionarea lor se va face conform normativului C56-1985.
7. Constructia se incadreaza in categoria de importanta B (constructii de importanta deosebita), modelul 1 de asigurare a calitatii si clasa de importanta B, conform HG 766/1997.
8. Proiectul va fi verificat la exigentele A4.2; B2.2; D2.2

N O T E

1. This plan has been drawn up based on the following data:
- Lay-out Plan;
- Longitudinal Profile;
- Cross-section Profile;
- Bridge's File;
- Hydraulic determination;
- Field Data.

2. Bridge convoys calculation corresponds to UIC (LM71 and SW/2.
3. The new bridge has the following structure:
- Superstructure: metallic girders embedded in concrete. with concrete box, for double track;
- Infrastructure: abutments and reinforced concrete, with direct foundation.

4. Details of the arrangement of the bed are shown in plan situation.
5. The execution will strictly comply with the provisions of "Practice code for concrete production NE 012/1-2007 and "Practice code for the concrete production and works execution, reinforced and pre-stressed concrete - Part 2: The execution of concrete works." NE 012/2-2010, and the quality and the reception of the works shall be made accordingly to Norm C 56-1985.
6. In case during the execution there will be found out any discrepancies between the existing situation on site and in project, the designer will be anounced.
7. The construction is classified in the B category of importance. Special importance constructions, model 1 for quality ensuring according to HG 766/97.
8. The project will be checked to comply with the requirements A4.2; B2.2; D2.2.

This drawing is forbidden to be copied, lent or used in other purposes than those previously approved by AREX *Lider* Company as its owner.
Se interzice copierea, difuzarea, imprumutarea sau utilizarea in alte scopuri, fara permisiunea AREX *Lider* Company ca proprietar al desenului.

Indice Index	Data Date	Modificare Modification/Revision	Proiectant Designer	Aprobat Consultant Approved Consultant	Aprobat CFR Approved CFR
D					
C					
B					
A	11.2011	Revizia 1 1 Revision	Campan Maria		

GUVERNUL ROMANIEI
ROMANIAN GOVERNMENT

PROIECT FINANŢAT DE UNIUNEA EURO
EUROPEAN UNION FINANCED PR

CLIENT / CLIENT

C.N.C.F. "C.F.R." - S.A.

CONSULTANT / CONSULTANT

			Data Date	SemnŁturŁ Signature
Aprobat Approved	ķef proiect Project manager	R. Liuzza		
Aprobat Approved	Coordonator SecŞune 1 Section 1 Coordinator	C. Gambelli		
Verificat Checked	Expert Cheie Checking Expert	V.Kallidromitis		

SUBCONTRACTANT / SUBCONTRACTOR

Aprobat Approved	Responsabil Subconsultant Subconsultant Responsible	A. Dinulescu Stanciu	08.2011	
Ȯtocmit Elaborated	Proiectant Designer	Maria Campan	08.2011	

Reabilitarea liniei de cale ferata Brakov - Simeria, parte componentŁ a coridorului IV Pan European, pentru circulaŞa trenurilor cu viteza maximŁ de 160 km/h,
Tronsonul : Braşov - Sighişoara
Rehabilitation of the railway line Braşov - Simeria, component Part of the IV Pan-European Corridor, for the trains circulation with maximum speed of 160 km/h,
Section : Braşov - Sighişoara

Proiect/Project
2004/RO/16/P/PA/003

Faza / Phase:
P.Th. / T.D.

Denumire desen / Drawing Title :

INTERVAL / SECTION FELDIOARA - APATA

POD Km 196+107.230 - D=12.00m- DISPOZITIE GENERALA
Bridge Km 196+107.230 - GENERAL LAYOUT

Codificare / Codification System	Scara / Scale 1:100 1:50	LOT / LOT	Nr. / No 01 / 01

EA51 01 C 08 PA PV 01 0 0 003 1

420x970