VEDERE IN PLAN / PLAN VIEW

Sc 1:100

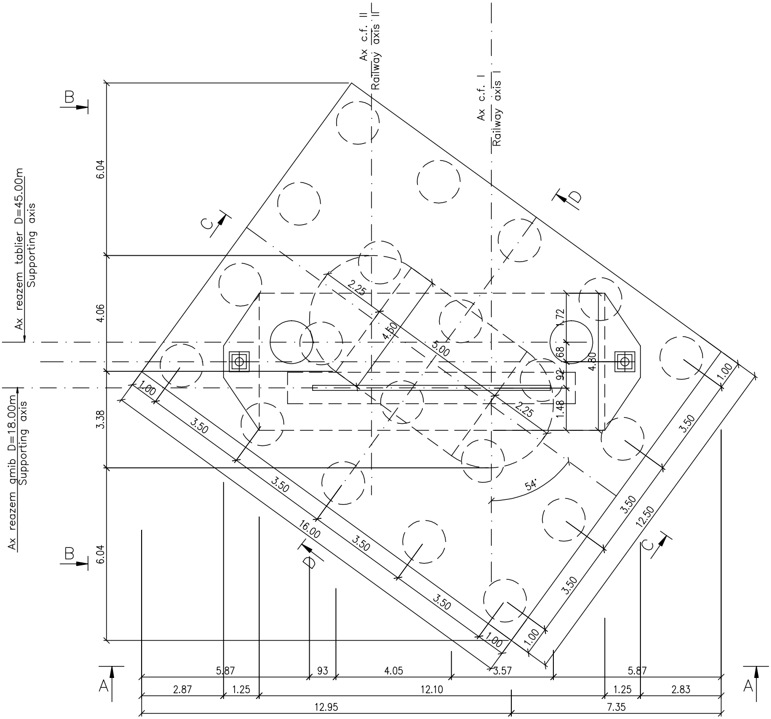
Ax c.f. II
Railway axis II
Ax c.f. I
Railway axis I
Ax reazem tablier D=45.00m
Supporting axis
Ax reazem gmib D=18.00m
Supporting axis
B
B
C
C
D
D
A
A
6.04
4.06
3.38
6.04
2.25
4.50
5.00
2.25
1.72
.68
.92
1.48
4.80
1.00
3.50
3.50
16.00
3.50
3.50
1.00
1.00
1.00
3.50
3.50
3.50
12.50
3.50
54°
5.87
93
4.05
3.57
5.87
2.87
1.25
12.10
1.25
2.83
12.95
7.35

VEDERE A–A PILA 1/ PIER 1 VIEW A–A

Sc 1:100

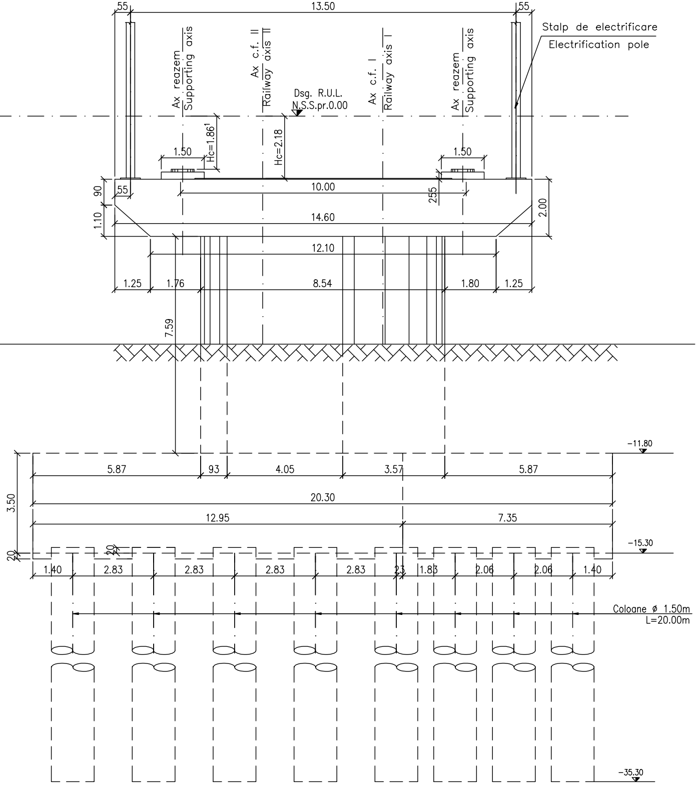

55
13.50
55
Stalp de electrificare
Electrification pole
Ax reazem
Supporting axis
Ax c.f. II
Railway axis II
Dsg. R.U.L.
N.S.S.pr.0.00
Ax c.f. I
Railway axis I
Ax reazem
Supporting axis
Hc=1.86
Hc=2.18
1.50
1.50
55
10.00
255
90
1.10
14.60
2.00
12.10
1.25
1.76
8.54
1.80
1.25
7.59
-11.80
5.87
93
4.05
3.57
5.87
20.30
3.50
12.95
7.35
-15.30
20
20
1.40
2.83
2.83
2.83
2.83
23
1.83
2.06
2.06
1.40
Coloane ϕ 1.50m
L=20.00m
-35.30

VEDERE A–A PILA 1/ PIER 1 VIEW A

Sc 1:100

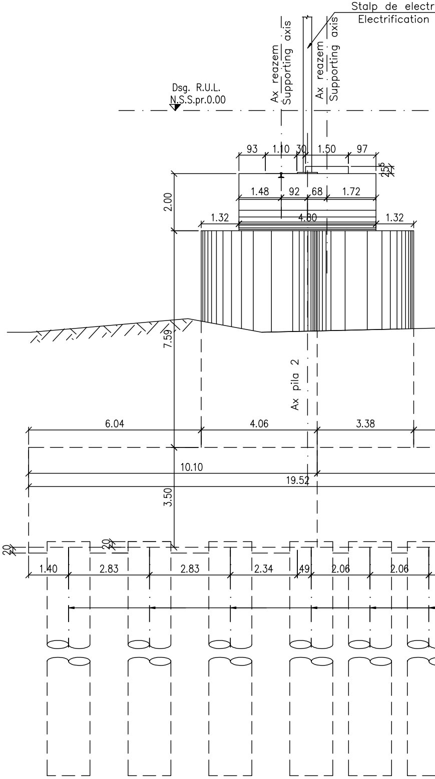

Stalp de electr
Electrification
Ax reazem
Supporting axis
Ax reazem
Supporting axis
Dsg. R.U.L.
N.S.S.pr.0.00
93
1.10
30
1.50
97
255
2.00
1.48
92
68
1.72
1.32
4.80
1.32
7.59
Ax pila 2
6.04
4.06
3.38
10.10
19.52
3.50
20
20
1.40
2.83
2.83
2.34
49
2.06
2.06

A–A

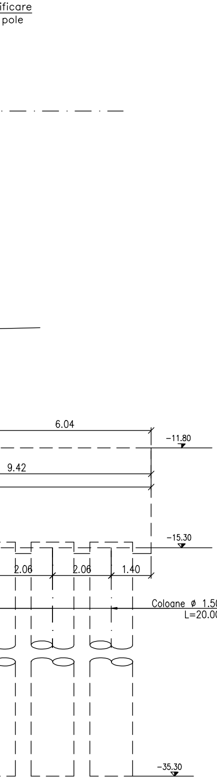
ificare
pole
6.04
−11.80
9.42
−15.30
2.06
2.06
1.40
Coloane ø 1.50m
L=20.00m
−35.30

SECTIUNE C–C / C–C SECTION

Sc 1:100

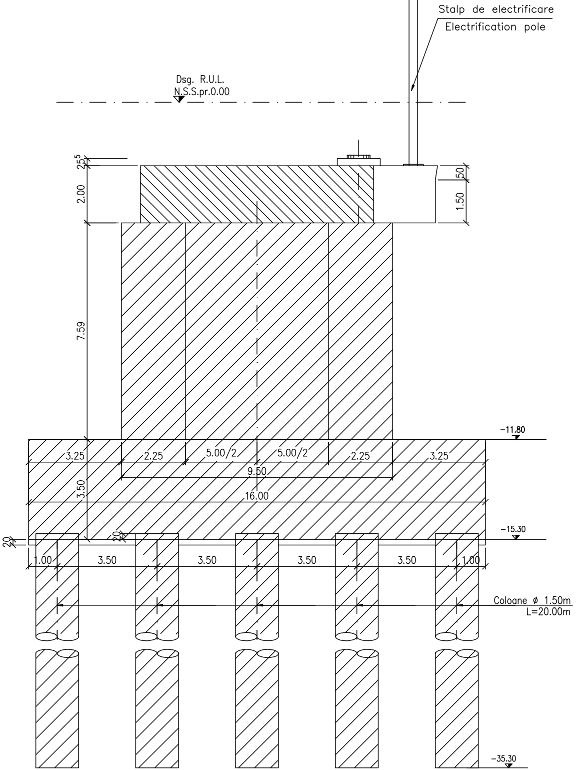
Stalp de electrificare
Electrification pole
Dsg. R.U.L.
N.S.S.pr.0.00
25
2.00
50
1.50
7.59
−11.80
3.25
2.25
5.00/2
5.00/2
2.25
3.25
9.50
3.50
16.00
−15.30
20
20
1.00
3.50
3.50
3.50
3.50
1.00
Coloane ø 1.50m
L=20.00m
−35.30

SECTIUNE D–D / D–D

Sc 1:100

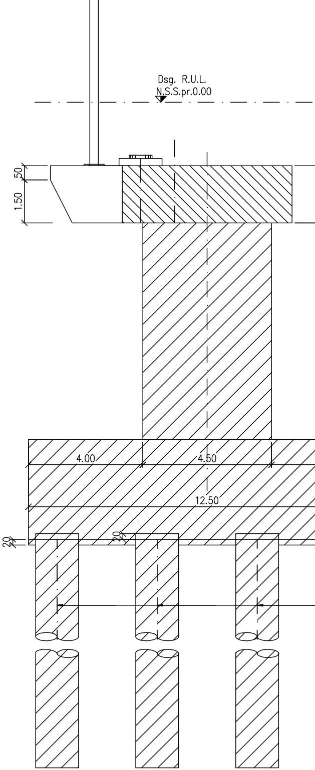
Dsg. R.U.L.
N.S.S.pr.0.00
50
1.50
4.00
4.50
12.50
20
20

SECTION

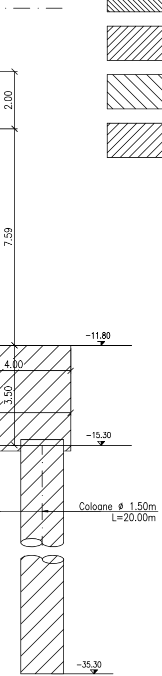
2.00
7.59
-11.80
4.00
3.50
-15.30
Coloane ø 1.50m
L=20.00m
-35.30

LEGENDA BETOANELOR/CONCRETE LIST

▧ Beton armat în cuzineti si in bancheta cuzinetilor
Reinforced concrete in the cushions and cushions bench
C 35/45-CEM I/A-S 52,5-(XC4+XF3+XA2)-A/C=0,50-D_{max}16-Cl 0,20

▨ Beton armat in fundatii indirecte(coloane si radiere) si in elevatii:
Plain concrete in abutments foundations:
C 25/30-CEM H II/A-S 42,5-(XC4+XF3)-A/C=0,50-D_{max}32-Cl 0,20

▧ Beton simplu in fundatii si elevatia aripilor:
Simple concrete foundations and elevation in the wings::
C 25/30-CEM II/A-S 32,5-(XF1)-A/C=0,50-D_{max}32-Cl 0,20

▨ Beton de egalizare
Concrete leveling
C 25/30-CEM II/A-S 32,5-(XF3)-A/C=0,55-D_{max}16-Cl 0,20

In cazul in care temperatura in timpul turnarii este scazuta, se vor folosi cimenturile cu rezistenta initiala mare, R si aditivi acceleratori, iar in cazul turnarii pe timp calduros, cimenturile cu rezistenta initiala uzuala, N si aditivi intarzietori (conf.NE 012/2-2010 si tabelului 2 din SR EN 197-1:2007).

When the temperature during the casting is low, cements with high initial resistance, R and accelerating additives shall be used and when it is cast during warm weather, cements with common initial resistance, N and delaying additives shall be used (according the norm NE 012/2-2010 and table 2 for the SR EN 197-1: 2007).

ATENTIE/ATENTION: Aprovizionarea aparatelor de reazem se va face inaintea executarii cuzinetilor si a banchetei acestora. In cazul in care inaltimea aparatelor de reazem aprovizionate difera fata de cea considerata in proiect se vor modifica inaltimile pe reazem corespunzator cu noile aparate.

The bearing blocks shall be supplied before building the bearings and their seats. In case the height of the supplied bearing blocks differs from that given in the project, the heights on the seats shall be adjusted so as to comply with the new devices.

NOTA

1. Prezentul plan s-a intocmit in conformitate cu dispozitia generala
2. Podul corespunde la convoaiele de calcul UIC (LM71 si SW/2).
3. Noul pod are urmatoarea alcatuire: - suprastructura: tablier metalic cu cuva din beton, pentru cale dubla;
- infrastructura: culei din beton armat, fundate indirect.
4. Cotele cuzinetilor si inaltimile pe reazem ale tablierelor se vor stabili numai dupa aprovizionarea ap. de reazem.
5. La executie se vor respecta cu strictete prevederile din "Normativ pentru producerea betonului si executarea lucrarilor din beton, beton armat si beton precomprimat. Partea 1: Producerea betonului", indicativ NE 012/1-2007 si "Normativ pentru producerea betonului si executarea lucrarilor din beton, beton armat si beton precomprimat. Partea 2: Executarea lucrarilor din beton", indicativ NE 012/2-2010, iar verificarea calitatii lucrarilor si receptionarea lor se va face conform normativului C56-1985.
-La proiect sunt atasate instructiunile pentru urmarirea curenta a comportarii in timp si Programul privind controlul calitatii lucrarilor.
6. Daca la executie se vor constata neconcordante intre situatia existenta pe teren si cea din proiect se va anunta proiectantul.
7. Constructia se incadreaza in categoria de importanta B (constructii de importanta deosebita), modelul 1 de asigurare a calitatii si clasa de importanta B, conform HG 766/1997.
8. Proiectul va fi verificat la exigentele A4.2; B2.2; D2.2

NOTE

1. This plan has been drawn up according to the general disposition.
2. Bridge convoys calculation corresponds to UIC (LM71 and SW/2).
3. The new bridge has the following structure: - Superstructure: metallic deck with concrete box for double track;
- Infrastructure: abutments and reinforced concrete, with indirectly foundation.
4. Shares bearing bushings and height on the decks will be established only after the supply of support equipment
5. The execution will strictly comply with the provisions of "Practice code for the concrete production and works execution, reinforced and pre-stressed concrete - Part 1: Practice code for concrete production" NE 012/1-2007 and "Practice code for the concrete production and works execution, reinforced and pre-stressed concrete - Part 2: The execution of concrete works." NE 012/2-2010, and the quality and the reception of the works shall be made accordingly to Norm C 56-1985.
6. In case during the execution there will be found out any discrepancies between the existing situation on site and in project, the designer will be anounced.
7. The construction has been classified in B category of importance (high important constructions), model 1 -ensuring the quality and class of importance B according to G.O. 766/97.
8. The project will be checked to comply with the requirements A4.2; B2.2; D2.2.

This drawing is forbidden to be copied, lent or used in other purposes than those previously approved by AREX ***Lider*** Company as its owner.
Se interzice copierea, difuzarea, imprumutarea sau utilizarea in alte scopuri, fara permisiunea AREX ***Lider*** Company ca proprietar al desenului.

D					
C					
B					
A	11.2011	Revizia 1 1 Revision	Campan Maria		
Indice Index	Data Date	Modificare Modification/Revision	Proiectant Designer	Aprobat Consultant Approved Consultant	Aprobat CFR Approved CFR

GUVERNUL ROMANIEI
ROMANIAN GOVERNMENT

PROIECT FINANŢAT DE UNIUNEA EURO
EUROPEAN UNION FINANCED PR

CFR

C.N.C.F. "C.F.R." - S.A.

CLIENT / CLIENT

ITALFERR
GRUPPO FERROVIE DELLO STATO
Joint Venture leader

Scott Wilson

OBERMEYER
PLANEN + BERATEN GmbH

TECNIC
Consulting Engineers

CONSULTANT / CONSULTANT

			Data Date	Semnătură Signature
Aprobat Approved	Şef proiect Project manager	R. Liuzza		
Aprobat Approved	Coordonator Secţiune 1 Section 1 Coordinator	C. Gambelli		
Verificat Checked	Expert Cheie Checking Expert	V.Kallidromitis		VK

●

SUBCONTRACTANT / SUBCONTRACTOR

AREX COMPANY

Aprobat Approved	Responsabil Subconsultant Subconsultant Responsible	A. Dinulescu Stanciu	11.2011	
Întocmit Elaborated	Proiectant Designer	Campan Maria	11.2011	

Reabilitarea liniei de cale ferata Braşov - Simeria, parte componentă a coridorului IV Pan European, pentru circulaţia trenurilor cu viteza maximă de 160 km/h,
Tronsonul : Braşov - Sighişoara
Rehabilitation of the railway line Braşov - Simeria, component Part of the IV Pan-European Corridor, for the trains circulation with maximum speed of 160 km/h,
Section : Braşov - Sighişoara

Proiect/Project
2004/RO/16/P/PA/003

Faza / Phase:
P.Th. / T.D.

Denumire desen / Drawing Title :

INTERVAL / SECTION FELDIOARA - APATA

POD / BRIDGE Km 200+477.804 - D=18.00+45.00+18.00m

PLAN COFRAJ PILA BRASOV / FORMWORK PLANE (BRASOV PIER)

Codificare / Codification System	Scara / Scale 1:100 1:50	LOT / LOT	Nr. / No 01 / 01

EA51 01 E 08 BB PV 01 3 2 004 0