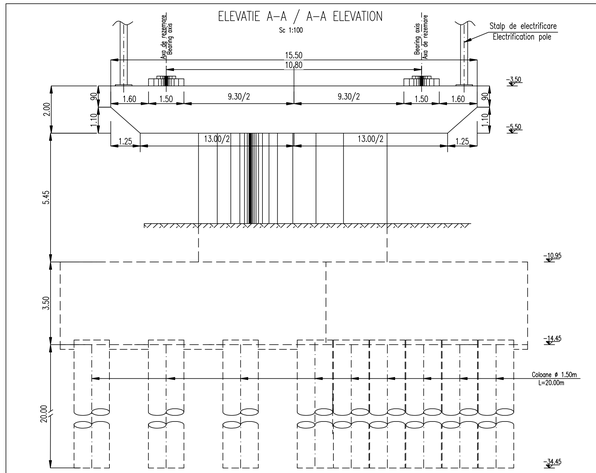

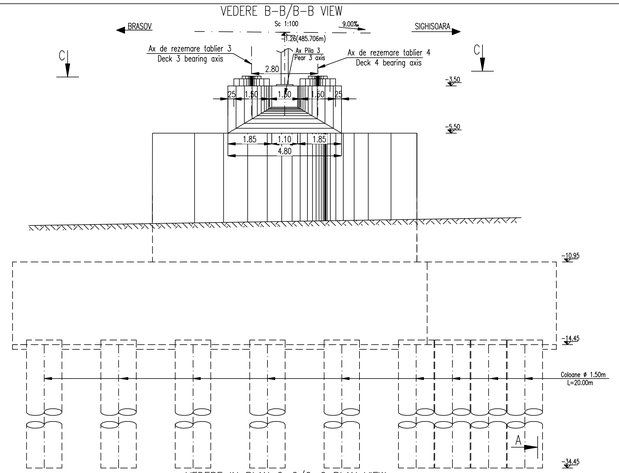

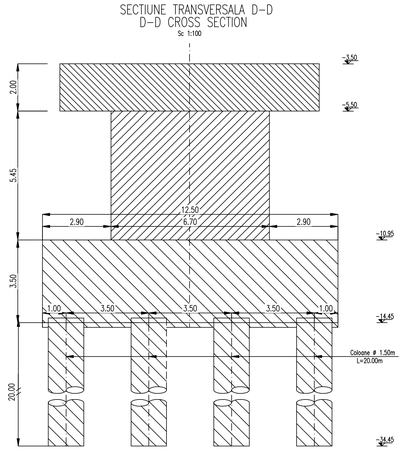

LEGENDA BETOANELOR/CONCRETE LIST

Beton armat in bancheta cuzinetilor
Reinforced concrete in the cushions and cushions bench
C 35/45–CEM I/A–S 52,5–(XC4+XF3+XA2)–A/C=0,50–D_16–Cl 0,20

Beton armat in elevatie si in zidurile intoarse
Reinforced concrete in the elevation infrastructure and reverted walls
C 25/30–Ciment H II/A–S 42,5–(XC4+XF3)–A/C=0,50–D_32–Cl 0,20

Beton simplu in fundatii:
Plain concrete in abutments foundations:
C 25/30–Ciment H II/A–S 42,5–(XF3)–A/C=0,50–D_32–Cl 0,20

Beton in stratul de protectie al hidroizolatiei
Concrete in the protection layer of the waterproofing
C 25/30–Ciment II/A–S 32,5–(XC4+XF3)–A/C=0,50–D_16–Cl 0,20

In cazul in care temperatura in timpul turnarii este scazuta, se vor folosi cimenturile cu rezistenta initiala mare, R si aditivi acceleratori, iar in cazul turnarii pe timp calduros, cimenturile cu rezistenta initiala uzuala, N si aditivi intarzietori (conform NE 012/2–2010 si tabelului 2 din SR EN 197–1:2002).
When the temperature during the casting is low, cements with high initial resistance, R and accelerating additives shall be used and when it is cast during warm weather, cements with common initial resistance, N and delaying additives shall be used (according the norm NE 012/2–2010 and table 2 for the SR EN 197–1: 2002).

ATENTIE/ATENTION

Aprovizionarea aparatelor de rezem se va face inaintea executarii cuzinetilor si a bancetei acestora. In cazul in care inaltimea aparatelor de rezem aprovizionate difera fata de cea considerata in proiect se vor modifica inaltimile pe rezem corespunzator cu noile aparate.
The bearing blocks shall be supplied before building the bearings and their seats. In case the height of the supplied bearing blocks differs from that given in the project, the heights on the seats shall be adjusted so as to comply with the new devices.

Se interdice copierea, difuzarea, imprumutarea sau utilizarea in alte scopuri, fara permisiunea AREX LIDER COMPANY ca proprietar al desenului.
This drawing is forbidden to be copied, lent or used in other purposes than those previously approved by AREX LIDER COMPANY as its owner.

Indice Index	Data Date	Modificare Modification/Revision	Proiectant Designer	Aprobat Consultant Approved Consultant	Aprobat CFR Approved CFR
D					
C					
B					
A	12.2011	Revizie 1 / Revision 1	Olar Mihai Adrian		

GUVERNUL ROMANIEI
ROMANIAN GOVERNMENT

PROIECT FINANŢAT DE UNIUNEA EUROPEANĂ
EUROPEAN UNION FINANCED PROJECT

CLIENT / CLIENT

C.N.C.F. "C.F.R." - S.A.

ITALFERR GRUPPO FERROVIE DELLO STATO "Joint Venture leader"
Scott Wilson
OBERMEYER PLANEN + BERATEN GmbH
TECNIC Consulting Engineers

CONSULTANT / CONSULTANT

			Data Date	Semnaturi Signature
Aprobat Approved	Şef proiect Project manager	R. Liuzza		
Aprobat Approved	Coordonator Secţiune 1 Section 1 Coordinator	C. Gambelli		
Verificat Checked	Expert Cheie Key Expert	V.Kalldromitis		

SUBCONTRACTANT / SUBCONTRACTOR

AREX LIDER COMPANY

Aprobat Approved	Responsabil Subconsultant Subconsultant Responsible	A. Dinulescu Stanciu	12.2011	
Întocmit Elaborated	Proiectant Designer	Olar Mihai Adrian	12.2011	

Reabilitarea liniei de cale ferata Brasov - Simeria, parte componentă a coridorului IV Pan European, pentru circulaţia trenurilor cu viteza maximă de 160 km/h,
Tronsonul : Braşov - Sighişoara
Rehabilitation of the railway line Brasov - Simeria, component Part of the IV Pan-European Corridor, for the trains circulation with maximum speed of 160 km/h,
Section : Braşov - Sighişoara

Project/Project 2004/RO/16/P/PA/003

Faza / Phase: P.Th. / T.D.

Denumire desen / Drawing Title :

INTERVAL / SECTION FELDIOARA - APATA

VIADUCT Km 201+571.960 - D=236.20m

PLAN COFRAJ PILA 3 / PEAR 3 FORMWORK PLAN

Codificare / Codification System: E A 5 1 | 0 1 | E | 0 8 | B B | P V | 0 1 | 5 | 2 | 0 0 6 | 1

Scara / Scale 1:1000 1:100 1:20 1:5 | LOT / LOT | Nr. / No 01 / 01

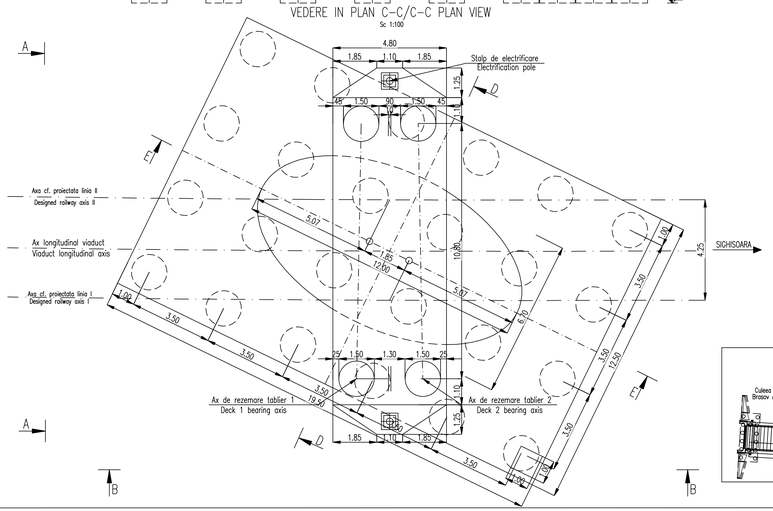

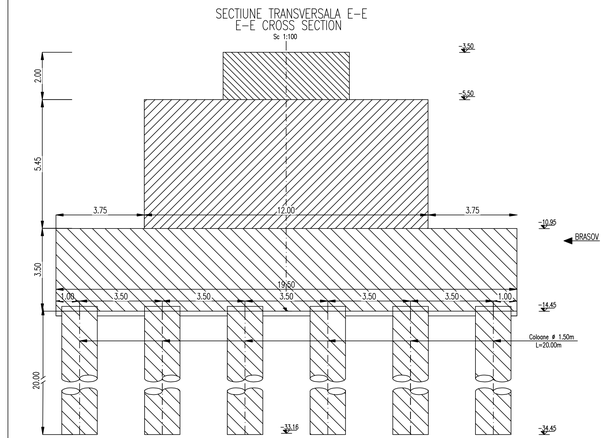

NOTA

1. Prezentul plan s–a intocmit in conformitate cu dispozitia generala
2. Executia partilor superioare ale cuzinetilor, amplasate deasupra bancetei cuzinetilor, se va face numai dupa procurarea aparatelor de rezem.
Nivelele superioare ale cuzinetilor se vor stabili dupa procurarea aparatelor de rezem, in functie de inaltimile fiecarui tip de aparat.
Executia zidurilor intoarse si a zidului de garda se va face dupa asezarea tablierului pe rezeme.
3. La executie se vor respecta cu strictete prevederile din "Normativ pentru producerea betonului si executarea lucrarilor din beton, beton armat si beton precomprimat. Partea 1: Producerea betonului", indicativ NE 012/1–2007 si "Normativ pentru producerea betonului si executarea lucrarilor din beton, beton armat si beton precomprimat. Partea 2: Executarea lucrarilor din beton", indicativ NE 012/2–2010, iar verificarea calitatii lucrarilor si receptionarea lor se va face conform normativului CSE–1985.
4. Constructia se incadreaza in categoria B de importanta. Constructii de importanta deosebita, modelul 1 de asigurare a calitatii conform HG 766/97.
5. Podul corespunde la convoaiele de calcul UIC (LM71 si SW/2).

NOTE:

1. This plan has been drawn up according to the general layout
2. The upper parts of the bearing placed over the bearing seat shall be built only after the procurement of the bearing blocks. the upper level of the bearings shall be established after the procurement of the bearing blocks depending on the height of the each bearing block type.
The reverted walls and the guard wall shall be carried out after putting the desk on the supports.
3. The execution will strictly comply with the provisions of "Practice code for the concrete production and works execution, reinforced and pre–stressed concrete – Part 1: Practice code for concrete production" NE 012/1–2007 and "Practice code for the concrete production and works execution, reinforced and pre–stressed concrete – Part 2: The execution of concrete works." NE 012/2–2010, and the quality and the reception of the works shall be made accordingly to Norm C 56–1985.
4. The construction is classified in the B category of importance. Special importance constructions, model 1 for quality ensuring according to HG 766/97.
5. Bridge convoys calculation corresponds to UIC (LM71 and SW/2).
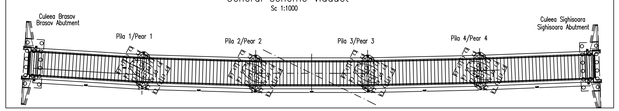
Schema generala viaduct
General scheme viaduct
Sc 1:1000