SITUATIA EXISTENTA / EXISTING SITUATION

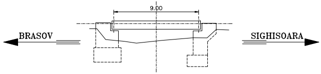
9.00
BRASOV
SIGHISOARA

VEDERE IN PLAN

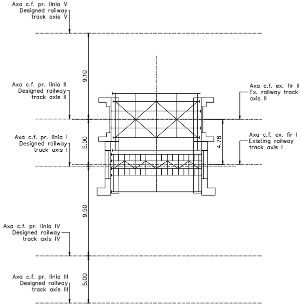
Axa c.f. pr. linia V
Designed railway track axis V
9.10
Axa c.f. pr. linia II
Designed railway track axis II
Axa c.f. ex. fir II
Ex. railway track axis II
5.00
4.78
Axa c.f. pr. linia I
Designed railway track axis I
Axa c.f. ex. fir I
Existing railway track axis I
9.50
Axa c.f. pr. linia IV
Designed railway track axis IV
5.00
Axa c.f. pr. linia III
Designed railway track axis III

SECTIUNE A-A / A-A SECTION

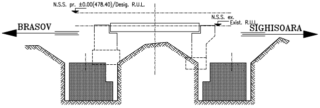
N.S.S. pr. ±0.00(478.40)/Desig. R.U.L.
N.S.S. ex.
Exist. R.U.L.
BRASOV
SIGHISOARA

VEDERE IN PLAN

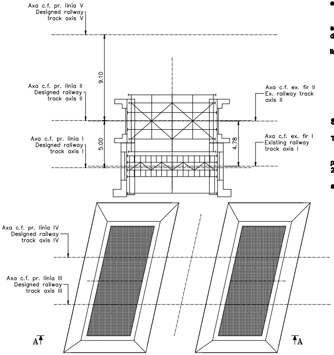
Axa c.f. pr. linia V
Designed railway track axis V
9.10
Axa c.f. pr. linia II
Designed railway track axis II
Axa c.f. ex. fir II
Ex. railway track axis II
5.00
4.78
Axa c.f. pr. linia I
Designed railway track axis I
Axa c.f. ex. fir I
Existing railway track axis I
Axa c.f. pr. linia IV
Designed railway track axis IV
Axa c.f. pr. linia III
Designed railway track axis III
A
A

FAZA I

Circulatie cu restrictie de viteza de 30.km/h pe liniile I si II existente

- pe amplasamentul liniilor III si IV proiectate, se executa sapatura cu sprijiniri, pana la partea superioara a fundatiilor si la taluz de 2:3 pana la terenul natural;
- se toarna betonul in fundatiile culeilor aferente podului de pe liniile III si IV;

STAGE I

Traffic with speed restriction of 30km/h on the existing lines I and

- in the location of the designed lines III and IV, excavation with propping will be performed up to the upper part of the foundations and 2:3 slope up to the natural ground;
- the concrete will be cast in the foundations of the bridge abutments on lines III and IV;

SECTIUNE B-B / B-B SECTION

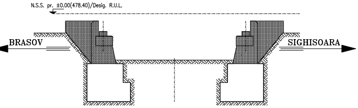
N.S.S. pr. ±0.00(478.40)/Desig. R.U.L.
BRASOV
SIGHISOARA

VEDERE IN PLAN

- se realizează umplutura in jurul fundatiilor;

se execută elevațiile culeilor noului pod, corespunzator noului profil al terasamentului in zona podului (cuzineții, bancheta cuzineților, zidul de gardă și zidurile întoarse);

- se executa drenul din spatele culeilor;
- se realizează umplutura din spatele si in jurul culeilor (se va avea in vedere cota corectiei albiei, sub pod), in straturi succesive, bine compactate, conform caietului de sarcini;
- se executa schela pentru montarea tablierului;

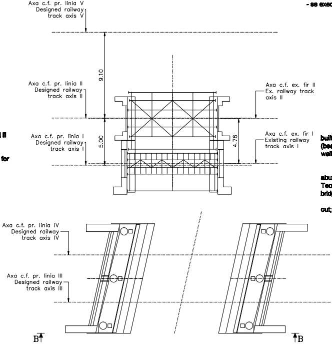
Axa c.f. pr. linia V
Designed railway track axis V
9.10
Axa c.f. pr. linia II
Designed railway track axis II
Axa c.f. ex. fir II
Ex. railway track axis II
5.00
4.78
Axa c.f. pr. linia I
Designed railway track axis I
Axa c.f. ex. fir I
Existing railway track axis I
Axa c.f. pr. linia IV
Designed railway track axis IV
Axa c.f. pr. linia III
Designed railway track axis III
B
B

- the filling will be carried out around the foundations;
- the elevations of abutments for the new bridge will be built according to the new embankment profile in the bridge area (bearing boxes, berm of bearing boxes, guard wall and reverted walls);
- the drain will be carried out behind the abutments;
- the filling will be carried out behind and around the abutments in well compacted successive layers according to the Technical Specifications (the riverbed correction level under the bridge will be taken into consideration);
- the scaffold for the deck mounting will be also carried out;

SECTIUNE C-C / C-C SECTION

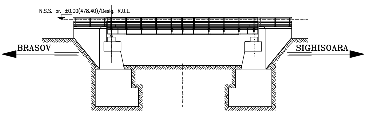
N.S.S. pr. ±0.00(478.40)/Desig. R.U.L.
BRASOV
SIGHISOARA

VEDERE IN PLAN

- se monteaza tablierul (grinzile principale, antretoazele, trotuarele si parapetele) si se aseaza pe reazemele definitive;
- se executa timpanele, totuarele si parapetele la culei;
- se armeaza, se cofreaza si se toarna betonul in cuva de a tablierului;
- se demonteaza schela de montaj;

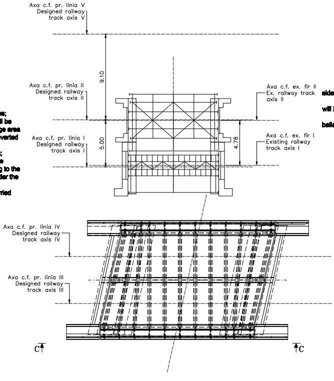
Axa c.f. pr. linia V
Designed railway track axis V
9.10
Axa c.f. pr. linia II
Designed railway track axis II
Axa c.f. ex. fir II
Ex. railway track axis II
5.00
4.78
Axa c.f. pr. linia I
Designed railway track axis I
Axa c.f. ex. fir I
Existing railway track axis I
Axa c.f. pr. linia IV
Designed railway track axis IV
Axa c.f. pr. linia III
Designed railway track axis III
C
C

- the deck will be mounted (main girders, cross bars, sidewalks and railings) and will be placed on the final supports;
- the tympana, sidewalks and railings for the abutments will be built;
- the concrete will be reinforced, molded and cast in the ballast box of the deck;
- the mounting scaffold will be dismantled;

SECTIUNE D-D / D-D SECTION

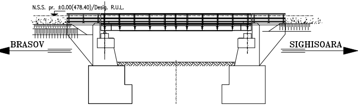
N.S.S. pr. ±0.00(478.40)/Desig. R.U.L.
BRASOV
SIGHISOARA

VEDERE IN PLAN

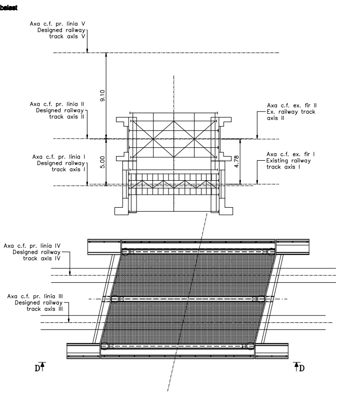
balast
Axa c.f. pr. linia V
Designed railway track axis V
9.10
Axa c.f. pr. linia II
Designed railway track axis II
Axa c.f. ex. fir II
Ex. railway track axis II
5.00
4.78
Axa c.f. pr. linia I
Designed railway track axis I
Axa c.f. ex. fir I
Existing railway track axis I
Axa c.f. pr. linia IV
Designed railway track axis IV
Axa c.f. pr. linia III
Designed railway track axis III
D
D

- după ce betonul din cuva a ajuns la rezistența de 100kg/cm ^{2}, dar nu mai devreme de 7 zile de la turnare, se trece la echiparea tablierului (betonul de pantă, hidroizolația și betonul de protecție al acesteia, prisma de piatră spartă, traverse, șină)
- se executa lucrarile necesare pentru racordarea podului la terasamente;
- se executa lucrarile de terasamente si suprastructura caii pana la pod;
- se racordează calea de pe pod cu calea de pe terasamentul nou proiectat;
- se monteaza liniile de contact pe noul amplasament;
- se executa scara de acces pe terasament;

- **se deschide circulația cu restrictie de viteza de 30 Km/h, pe liniile III si IV proiectate, în trepte de viteză, conform instrucțiilor de cale ferată în vigoare;**

- when the concrete in the box reached 100kg./cm2 resistance, but no earlier than 7 days from casting, the deck will be equipped (slope concrete, waterproofing and protection concrete, crushed stone prism, sleepers, rail)
- the required works will be carried out to link the bridge to the embankments;
- the track embankment and superstructure works will be carried out up to the bridge;
- the track on the bridge will be connected to the track on the new designed embankment;
- the contact lines will be mounted in the new location;
- the access stair will be built on the embankment;

- **the traffic will be opened with 30 Km/h speed restriction on the designed tracks III and IV, with speed steps according to the railway instructions in force;**

SECTIUNE E-E / E-E SECTION

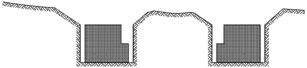

VEDERE IN PLAN

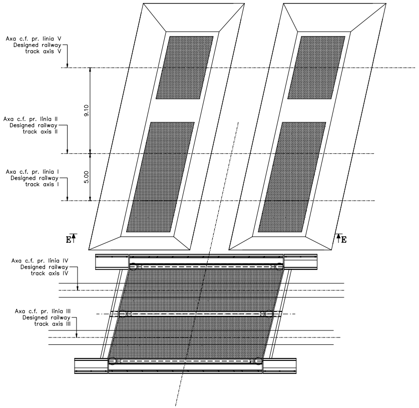
Axa c.f. pr. linia V
Designed railway track axis V
9.10
Axa c.f. pr. linia II
Designed railway track axis II
5.00
Axa c.f. pr. linia I
Designed railway track axis I
E
E
Axa c.f. pr. linia IV
Designed railway track axis IV
Axa c.f. pr. linia III
Designed railway track axis III

FAZA II

Circulatie cu restrictie de viteza de 30km/h pe liniile III si IV proiectate

- se demonteaza suprastructura caii de pe tablierele existente (linia I si II existente);
- se demonteaza calea de pe terasament in zona adiacenta podului;
- se scot din cale, cu macaraua, tablierele metalice de pe traseul existent si se transporta in depozit;
- se demoleaza integral culeile existente;
- se executa sapatura cu sprijiniri, pana la partea superioara a fundatiilor si la taluz de 2:3 pana la terenul natural, in amplasamentul noilor linii proiectate, I, II si V, acordandu-se o atentie deosebita vecinatatii culeilor deja executate, in amplasamentul liniilor III si IV(se vor lua masuri suplimentare de sprijinire a sapaturii) ;
- se toarna betonul in fundatiile noilor culei (liniile I, II si V, proiectate);

STAGE II

Traffic with speed restriction of 30km/h on the designed tracks III and IV

- the track superstructure on the existing decks will be demounted se (existing lines I and II);
- the track on the embankment will be demounted in the area adjacent to the bridge;
- the metallic decks on the existing route will be removed from track by crane and will be transported to the storage place;
- the existing abutments will be completely demolished;
- excavations with propping will be performed up to the upper part of the foundations and for 2:3 slope up to the natural ground in the location of the new designed lines I, II and V, paying special attention to the already built abutments in the location of the designed lines III and IV (additional measures will be taken to prop up the excavations);
- the concrete will be cast in the foundations of the new abutments (designed lines I, II and V);

SECTIUNE F-F / F-F SECTION

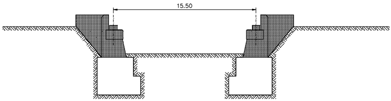

VEDERE IN PLAN

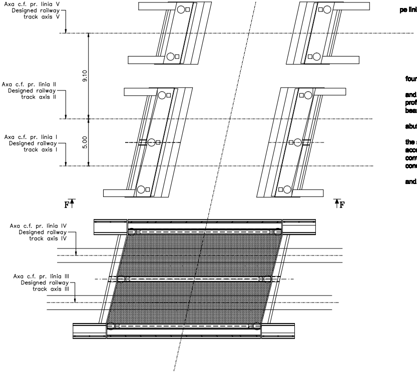
Axa c.f. pr. linia V
Designed railway track axis V
Axa c.f. pr. linia II
Designed railway track axis II
Axa c.f. pr. linia I
Designed railway track axis I
9.10
5.00
F
F
Axa c.f. pr. linia IV
Designed railway track axis IV
Axa c.f. pr. linia III
Designed railway track axis III

- se realizează umplutura in jurul fundatiilor;
- se execută elevațiile culeilor de pe liniile I, II si V, corespunzator noului profil al terasamentului in zona podului (cuzineții, bancheta cuzineților, zidul de gardă și zidurile întoarse);
- se executa drenul din spatele culeilor;
- se realizează umplutura din spatele si in jurul culeilor (se va avea in vedere cota corectiei albiei, sub pod), in straturi succesive, bine compactate, conform caietului de sarcini;
- se executa schela pentru montarea tablierelor de pe liniile I, II si V;

- the filling will be carried out around the foundations;
- the elevations of abutments on the lines I, II and V will be built according to the new embankment profile in the bridge area (bearing boxes, berm of bearing boxes, guard wall and reverted walls);
- the drain will be carried out behind the abutments;
- the filling will be carried out behind and around the abutments in well compacted successive layers according to the Technical Specifications (the riverbed correction level under the bridge will be taken into consideration;
- the scaffold to mount the decks on lines I, II and V will be also carried out;

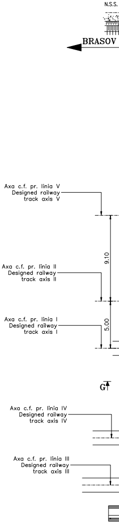
N.S.S.
BRASOV
Axa c.f. pr. linia V
Designed railway track axis V
9.10
Axa c.f. pr. linia II
Designed railway track axis II
Axa c.f. pr. linia I
Designed railway track axis I
5.00
G
Axa c.f. pr. linia IV
Designed railway track axis IV
Axa c.f. pr. linia III
Designed railway track axis III

SECTIUNE G-G / G-G SECTION

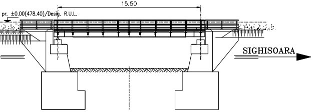
15.50
pr. ±0.00(478.40)/Desig. R.U.L.
SIGHISOARA

VEDERE IN PLAN

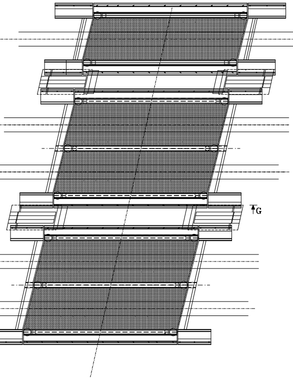

- se monteaza tablierele aferente liniilor I, II si V (grinzile principale, antretoazele, trotuarele si parapetele) si se aseaza pe reazemele definitive;
- se executa timpanele, totuarele si parapetele la culei;
- se armeaza, se cofreaza si se toarna betonul in cuvele de balast ale tablierelor;
- se demonteaza schelele de montaj;
- după ce betonul din cuve a ajuns la rezistența de 100kg/cm ^{2}, dar nu mai devreme de 7 zile de la turnare, se trece la echiparea tablierelor (betonul de pantă, hidroizolația și betonul de protecție al acesteia, prisma de piatră spartă, traverse, șină)
- se executa lucrarile necesare pentru racordarea podurilor la terasament;
- se executa protectia din beton a taluzului dintre cele 3 culei si casiul din beton din aceasta;
- se executa lucrarile de terasamente si suprastructura caii pana la pod;
- se racordează calea de pe pod cu calea de pe terasamentul nou proiectat;
- se executa montarea liniilor de contact pe noul amplasament;
- se executa scara de acces pe terasament (la linia V);

- **se deschide circulația si pe liniile I, II si V proiectate, în trepte de viteză, conform instrucțiilor de cale ferată în vigoare;**

- se ridica restrictia de viteza de pe liniile III si IV;
- se executa lucrarile de protectie si corectie a albiei in zona podului.

- the decks afferent to lines I, II and V will be mounted (main girders, cross bars, sidewalks and railings) and will be placed on the final supports;
- the tympana, sidewalks and railings for the abutments will be built;
- the concrete will be reinforced, molded and cast in the ballast boxes of the decks;
- the mounting scaffolds will be dismantled;
- when the concrete in the box reached 100kg/cm ^{2} resistance, but no earlier than 7 days from casting, the decks will be equipped (slope concrete, waterproofing and protection concrete, crushed stone prism, sleepers, rail)
- the required works will be carried out to link the bridges to the embankment;
- the concrete protection will be carried out for the slope between the 3 abutments and the afferent concrete side ditch;

- the track embankment and superstructure works will be carried out up to the bridge;
- the track on the bridge will be connected to the track on the new designed embankment;
- the contact lines will be mounted in the new location;
- the access stair will be built on the embankment (line V);

- **the traffic will be opened on the designed lines I, II and V, with speed steps according to the railway instructions in force;**

- the speed restriction will be removed on lines III and IV;
- the protection and correction works for the riverbed will be carried out in the bridge area.

This drawing is forbidden to be copied, lent or used in other purposes than those previously approved by AREX *Lider* Company as its owner.
Se interzice copierea, difuzarea, imprumutarea sau utilizarea in alte scopuri, fara permisiunea AREX *Lider* Company ca proprietar al desenului.

D					
C					
B					
A	11.2011	Revizia 1 1 Revision	Vasile Stirbu		
Indice Index	Data Date	Modificare Modification/Revision	Proiectant Designer	Aprobat Consultant Approved Consultant	Aprobat CFR Approved CFR

GUVERNUL ROMANIEI
ROMANIAN GOVERNMENT

PROIECT FINANȚAT DE UNIUNEA EURO
EUROPEAN UNION FINANCED PR

CLIENT / CLIENT

C.N.C.F. "C.F.R." - S.A.

ITALFERR
GRUPPO FERROVIE DELLO STATO
Joint Venture leader

Scott Wilson

OBERMEYER
PLANEN + BERATEN GmbH

TECNIC
Consulting Engineers

CONSULTANT / CONSULTANT			Data Date	Semnătură Signature
Aprobat Approved	Şef proiect Project manager	R. Liuzza		
Aprobat Approved	Coordonator Secțiune 1 Section 1 Coordinator	C. Gambelli		
Verificat Checked	Expert Cheie Checking Expert	V.Kallidromitis		VK

SUBCONTRACTANT / SUBCONTRACTOR

AREX
COMPANY

Aprobat Approved	Responsabil Subconsultant Subconsultant Responsible	A. Dinulescu Stanciu	10.2011	
Întocmit Elaborated	Proiectant Designer	Vasile Stirbu	10.2011	

Reabilitarea liniei de cale ferata Brașov - Simeria, parte component ă a coridorului IV Pan European, pentru circula ția trenurilor cu viteza maxim ă de 160 km/h,
Tronsonul : Brașov - Sighișoara
Rehabilitation of the railway line Brașov - Simeria, component Part of the IV Pan-European Corridor, for the trains circulation with maximum speed of 160 km/h,
Section : Brașov - Sighișoara

Proiect/Project
2004/RO/16/P/PA/003

Faza / Phase:
P.Th. / T.D.

Denumire desen / Drawing Title :

STATIA / STATION APATA
POD / BRIDGE Km 207+257.850 - D=15.50m -
PROCES TEHNOLOGIC / SEQUENCE OF OPERATIONS

Codificare / Codification System	Scara / Scale 1:200	LOT / LOT	Nr. / No 01 / 01

EA51 01 C 09 DX PV 017 0 003 1

2517x420=1.06mp