ELEVATIE A–A / A–A ELEVATION

Scara 1:200

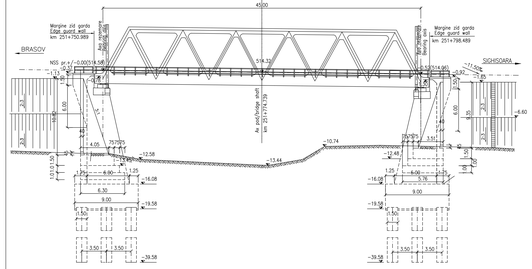

PLAN / PLANE VIEW

Scara 1:200

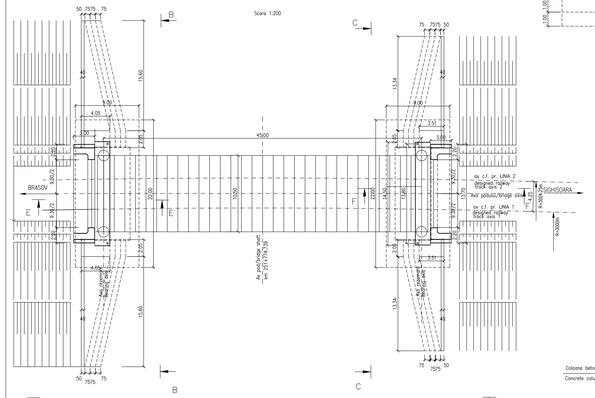

VEDERE B–B/VIEW B–B

Sc 1:100

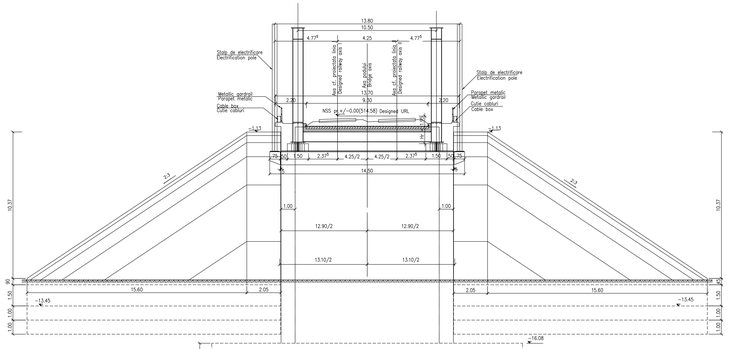

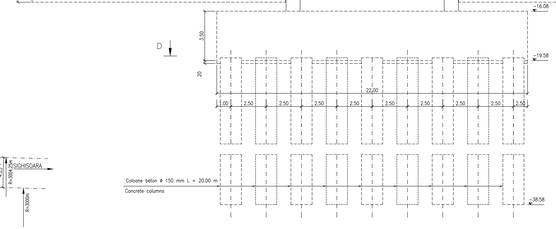

SECTIUNEA D–D / D–D SECTION

Sc 1:100

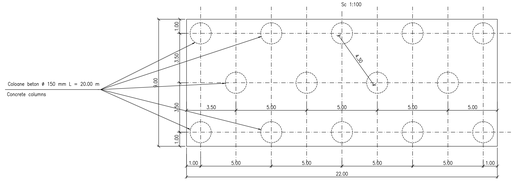

VEDERE C–C / VIEW C–C

Sc 1:100

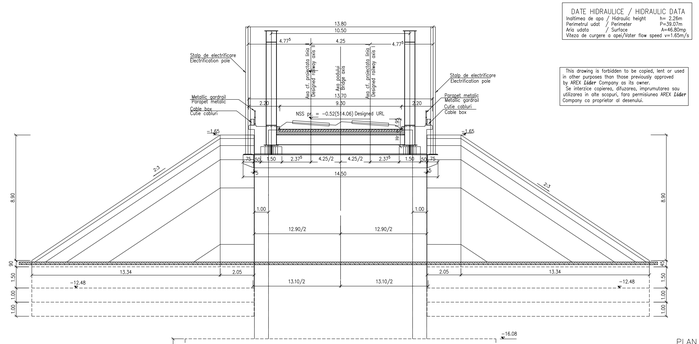

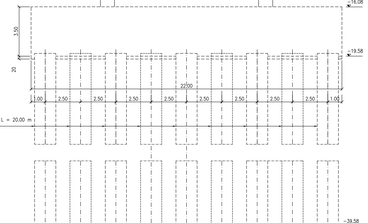

SECTIUNEA E–E / E–E SECTION

Sc 1:200

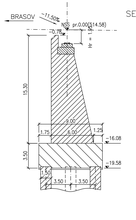

SECTIUNEA F–F / F–F SECTION

Sc 1:200

SCHEMA GEOMETRICA A TABLIERULUI
GENERAL SCHEME DECK

ELEVATIE GRINDA STANGA/LEFT BEAM ELEVATION

PLAN / PLANE

DATE HIDRAULICE / HIDRAULIC DATA

Inălțimea de apă / Hydraulic height	h= 2.25m
Viteza curgerii / Current speed	v= 1.65m/s
Aria secțiunii / Surface	A=46.80mp
Viteza de curgere a apei/Water flow speed	v=1.65m/s

This drawing is forbidden to be copied, lent or used in other purposes than those previously approved by AREX Căi Ferate Company as its owner.
Se interdice copierea, dăruirea, împrumutarea sau utilizarea în alte scopuri, fără permisiunea AREX Căi Ferate Company ca proprietar al desenului.

N O T A

Lungimea fisei cotumelor se va stabili în urma forari „in situ" cu identificarea fisei litologice, si in urma incercarilor la rupere a coloanelor de proba executate in alara amplasamentului.
Capacitatea portanta a coloanelor se va stabili conform prevederilor din EUROCOD.
Capacitatea portanta a coloanelor se va stabili conform prevederilor din EUROCOD; sectiunea Geotehnica, cu coeficienti pentru incercari „in situ".
Toate coloanele se vor verifica US.

N O T E

The length of the columns will be established based on the "in situ" drilling, identifying the lithological configuration of the soil (Lithological Sheet), after the breakdown tests made on the testing columns built outside the final location.
The number of the testing columns was established complying with the provisions in EURO CODE.
The columns bearing capacity shall be established complying with the provisions in EURO CODE, Geotechnical section, using the "in situ" testing coefficients.
All columns shall be checked US.

APARATE DE REAZEM CU NEOPREN SI TEFLON/NEOPRENE AND TEFLON BEARING BLOCKS
ASEZAREA APARATELOR/PLACING THE BEARING BLOCKS

1. APARAT DE REAZEM FIX / FIXED BEARING BLOCK
2. APARAT DE REAZEM GLISANT GHIDAT / GUIDED SLIDING BEARING BLOCK
3. APARAT DE REAZEM LIBER / FREE BEARING BLOCK
4. APARAT DE REAZEM GLISANT GHIDAT / GUIDED SLIDING BEARING BLOCK

PLAN FUNDATII / FOUNDATIONS PLAN

Scara 1:200

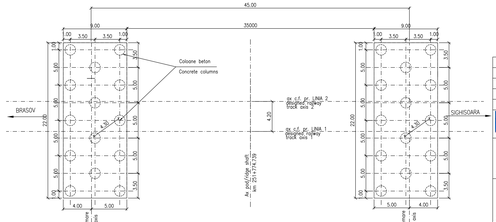

SCHEMA DE AMPLASARE PE POD A LINIILOR C.F.

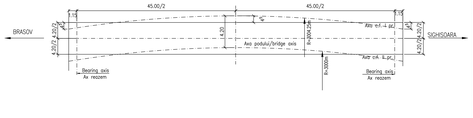

N O T A

1. Prezentul plan s-a întocmit pe baza urmatoarelor date:
– plan de situatie;
– profil in lung;
– profil transversal;
– fisa podului;
– catiul hidraulic;
– date cuiere pe teren.
2. Podul corespunde la convoalele de calcul UIC (LM71 si SW/2).
3. Podul pre urmatoarele alcatuire:
– suprastructura: tablier metalic cu cuiere din beton, pentru cale dubla;
– infrastructura: culei din beton armat, fundate pe coloane.
4. La executie se vor respecta cu strictete prevederile din "Normativ pentru productia betonului", indicativ NE 012/1-2007 si "Normativ pentru productia betonului si executarea lucrarilor din beton, beton armat si beton precomprimat. Partea 2: Executarea lucrarilor din beton", indicativ NE 012/2+2010, ce verificarea calitatii lucrarilor si receptionarea lor se va face conform normativului CSA-1985.
–La proiect sunt atasate instructiunile pentru urmarirea curenta a comportarii in timp a Programul privind controlul calitatii lucrarilor.
5. Daca la executie se vor constatta neconcordante intre situatia existenta pe teren si cea din proiect se va anunta proiectantul.
6. Constructia se incadreaza in categoria B de importanta. Constructii de importanta deosebita, modelul I de asigurare a calitatii conform HG 766/97.
7. Proiectul va fi verificat la exigentele A4.2; B2.2; D2.2
8. Din lipsa studiilor geotehnice la pozitia kilometrica 251+774.739 se va definitiva rezultul elevatie – teren, dimensiunile in plan si cota de fundare la care se executa saparturi in prezenta geotehnicianului

N O T E

1. This plan has been drawn up based on the following data:
– Lay-out Plan;
– Longitudinal Profile;
– Cross-section Profile;
– Bridge's Flie;
– Hydraulic determination;
– Field Data;
2. Bridge convoys calculation corresponds to UIC (LM71 and SW/2).
3. The bridge has the following structure:
– Superstructure: metallic deck with concrete box for double track;
– Infrastructure: abutments and reinforced concrete, with the foundation on the concrete columns.
4. The execution will strictly comply with the provisions of "Practice code for concrete production CP 012/1-2007 and "Practice code for the concrete production and works execution, reinforced and pre-stressed concrete – Part 2: The execution of concrete works." NE 012/2+2010, and the quality and the reception of the works shall be made accordingly to Norm C 56-1985.
5. In case during the execution there will be found out any discrepancies between the existing situation on site and in project, the designer will be anounced.
6. The construction is classified in the B category of importance. Special importance constructions, model 1 for quality ensuring according to HG 766/97.
7. The project will be checked to comply with the requirements A4.2; B2.2; D2.2.
8. Due to the lock of geotehnical studies at kilometer position 251+774.739 the elevation – ground joint, the dimensions in plan and the foundation level for the excavation will be finalized in the geo-technician presence.

D					
C					
B					
A	12.2011	Revizie 1 / Revision 1	Constantin Miculeie		
Indice / Index	Data / Date	Modificare / Modification/Revision	Proiectant / Designer	Aprobat Consultant / Approved Consultant	Aprobat CFR / Approved C.F.R.

GUVERNUL ROMANIEI
ROMANIAN GOVERNMENT

PROIECT FINANTAT DE UNIUNEA EUROPEANĂ
EUROPEAN UNION FINANCED PROJECT

CLIENT / CLIENT

C.N.C.F. "C.F.R." - S.A.

ITALFERR GRUPPO FERROVIE DELLO STATO / GROUP STATEBLOCK RAILWAY — Scott Wilson — OBERMEYER PLANUNG + BERATUNG GmbH — TECNIC Consulting Engineers

CONSULTANT / CONSULTANT

			Data / Date	Semnătura / Signature
Verificat / Approved	Şef proiect / Project manager	R. Liuzza		
Aprobat / Approved	Coordonator Sectiune 1 / Section 1 Coordinator	C. Ciantelli		
Aprobat / Approved	Director Proiectare / Design Director	V.Kaldybonnitis		

SUBCONTRACTANT / SUBCONTRACTOR

AMEC

Aprobat / Approved	Responsabil Subconsultant / Subconsultant Responsible	A. Dimakeros Stavros	11.2011	
Verificat / Reviewed	Responsabil Proiectare / Designer	Constantin Miculeie	11.2011	

Reabilitarea linei de cale ferata Brasov - Simeria, parte componenta a coridorului IV Pan European, pentru circulatia trenurilor cu viteza maxima de 160 km/h.
Tronsonul : Brasov - Sighisoara
Rehabilitation of the railway line Brasov - Simeria, component Part of the IV Pan-European Corridor, for the trains circulation with maximum speed of 160 km/h,
Section : Brasov - Sighisoara

Proiect/Project
2004/RO/16/P/PA/003

Faza / Phase:
P.Th. / T.D.

Denumire desen / Drawing Title :

INTERVAL / SECTION CATA - ARCHITA
POD / BRIDGE Km 251+774,739 D=45,00m
DISPOZITIE GENERALA / GENERAL DISPOSITION

Codificator / Codification System

Scara / Scale 1:200 1:100	LOT / LOT	Nr. / No. Fil / Sht.
E A S 1 0 1 C 1 4 P A P V 0 3 0 0 0 0 2 3		

1822 x 594