SECTIUNE C–C

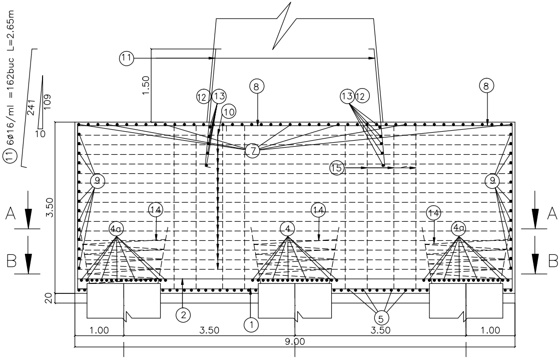

⑪ 6ø16/ml =162buc L=2.65m
241
109
10
⑪
1.50
⑫⑬
⑩
⑧
⑬⑫
⑧
⑦
⑮
⑨
⑨
A
B
A
B
3.50
⑭
4a
④
⑭
⑭
4a
20
②
①
⑤
1.00
3.50
3.50
1.00
9.00

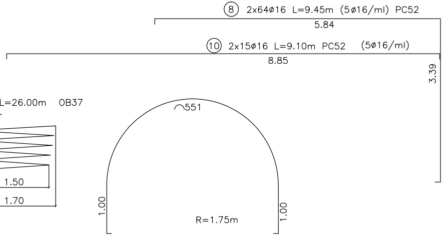
⑧ 2x64ø16 L=9.45m (5ø16/ml) PC52

⑩ 2x15ø16 L=9.10m PC52 (5ø16/ml)

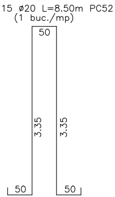
⑮ 115 ø20 L=8.50m PC52
(1 buc./mp)

50
3.35
3.35
50
50

⑭ Freta ø12 L=26.00m OB37
12 buc.

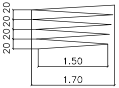

20
20
20
20
20
1.50
1.70

551
1.00
1.00
R=1.75m

⑫ 2x5ø12 L=7.80 PC52

SECTIUNE D–

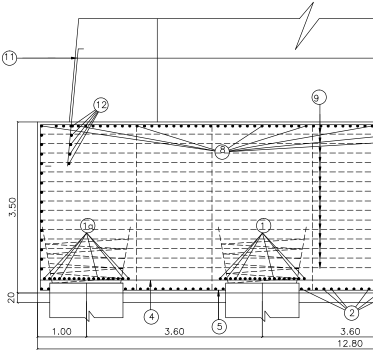

⑪
⑫
⑨
⑧
3.50
1a
①
20
④
⑤
②
1.00
3.60
3.60
12.80

7a 46ø16 L=4.70m (5ø16/ml)

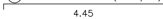

⑨ 2x2x15ø16 L=6.80m PC52 (5ø16/ml)

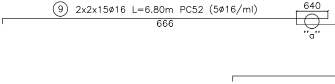

—D

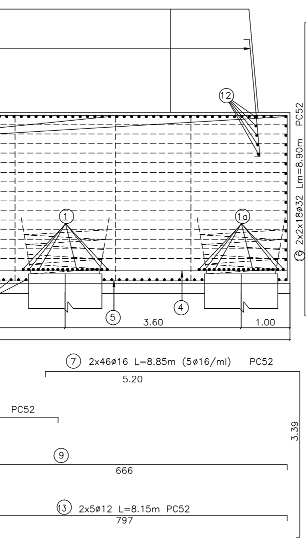

12
1
1a
PC52
⑯ 2x2x18ø32 Lm=8.90m
var(5.20–6.00)
5
4
3.60
1.00
⑦ 2x46ø16 L=8.85m (5ø16/ml) PC52
5.20
3.39
PC52
⑨
666
⑬ 2x5ø12 L=8.15m PC52
797

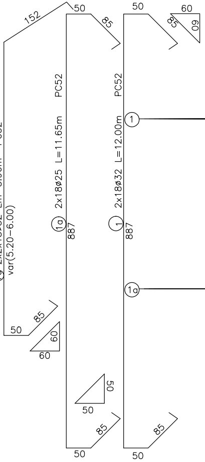

152
50
85
60
60
1a
2x18ø25 L=11.65m PC52
887
1
2x18ø32 L=12.00m PC52
887
50
85
60
60
50
50
85
85
50
50

SECTIUNE A–A

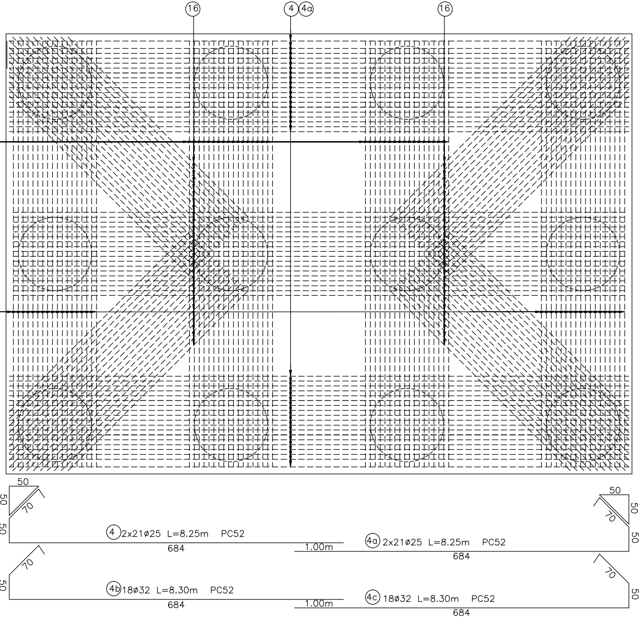

16
4
4a
16
1
1a
50
50
70
50
50
50
70
50
④ 2x21ø25 L=8.25m PC52
684
1.00m
4a 2x21ø25 L=8.25m PC52
684
50
70
50
70
4b 18ø32 L=8.30m PC52
684
1.00m
4c 18ø32 L=8.30m PC52
684

SECTIUNE B-B

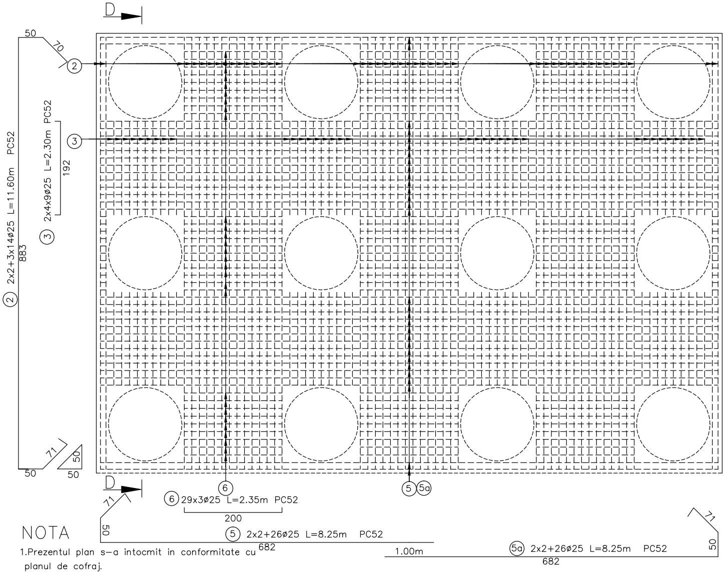
D
50
70
2
3
2x2+3x14ø25 L=11.60m PC52
883
2
2x4x9ø25 L=2.30m PC52
192
3
71
50
50
50
6
5
5a
D
71
6 29x3ø25 L=2.35m PC52
200
50
5 2x2+26ø25 L=8.25m PC52
682
1.00m
5a 2x2+26ø25 L=8.25m PC52
682
71
50

NOTA

1.Prezentul plan s-a intocmit in conformitate cu planul de cofraj.

2.Armarea coloanelor este cuprinsa in planul EA5101E14BCPV03120100.

3.Betonul din radier se va turna prin pompare.

4.La punerea in opera a betonului turnat prin pompare se vor lua toate masurile

-procesul de pompare sa se desfasoare continuu fara intreruperi;
-turnarea sa se faca in 3(trei) puncte si sa dureze max 6 ore;
-inaltimea libera de cadere a betonului sa fie de max 0.5m;
-betonul se va turna in straturi de max. 40cm grosime, pentru a permite o buna vibrare.
-betonul sa fie bine compactat prin vibrare.

MASURATOAREA OTELULUI BETON NECESAR PENTRU ARMAREA RADIERULUI

EXTRAS DE ARMATURA PENTRU UN RADIER PILA
REINFORCEMENT FOR ONE PYLE RAFT

Marca	Diametru	Lung./buc.[m]	Nr.buc.	S355			S345		
				Φ10	Φ12	Φ14	Φ16	Φ20	Φ25
1	32	12.00	36						
2	25	11.60	46						533.60
3	25	2.30	72						165.60
4	25	8.25	42						346.50
4a	25	8.25	42						346.50
4b	32	8.30	18						
4c	32	8.30	18						
5	25	8.25	30						247.50
5a	25	8.25	30						247.50
6	25	2.35	87						204.45
7	16	8.85	92				814.20		
7a	16	4.45	46				204.70		
8	16	9.45	128				1209.60		
9	16	6.80	60				408.00		
10	16	9.10	30				273.00		
11	16	2.65	162				429.30		
12	12	7.80	10		78.00				
13	12	8.15	10		81.50				
14	12	26.00	12		312.00				
15	20	8.50	115					977.50	
16	32	8.90	72						
Lungimi totale pe diametre			(m)	0.00	471.50	0.00	3338.80	977.50	2091.65
Masa pe metru liniar			(kg/ml)	0.617	0.888	1.208	1.578	2.47	3.85
Masa pe diametre			(kg)	0.00	418.61	0.00	5269.75	2410.66	8059.88
Masa pe tip otel			(kg)	419.00			24399.68		
Masa totala radier			(kg)	24820.00					
Pierderi 5%			(kg)	1241.00					
Masa totala radier			(kg)	26100.00					

PENTRU 3 RADIERE: 3x26100 kg =78300 kg

DETALIUL "a"

INADIREA BARELOR DIN OTEL PC 52 PRIN SUDARE MANUALA CU ARC ELECTRIC

Sc. 1:5

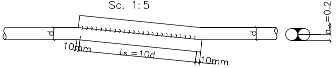
d
d
10mm
ls =10d
10mm
a_{min}=0.24d

Innadire prin suprapunere, cusatura pe ambele parti cu cusatura de racordare la barele necoaxiale ø>20, conf. C28/83.

NOTE:

1.This drawing was drawn up according to the shuttering plan
2.The column reinforcing can be found in drawing EA5101E14BCPV03120100.
3.The concrete in the raft will be cast by pumping.
4.During pumped concrete placement, all measures will be taken so that:
-the pumping process will be continuous, without any interruption;
-the concrete will be cast in 3 (three) points and will last max. 6 hours;
-the free falling height of concrete will be max. 0.5m;
-the concrete will be cast in max. 40 cm thick layers to allow good vibration;
-the concrete will be well-compacted by vibration.

Φ32
432.00
149.40
149.40
640.80
1371.60
6.31
8659.38

Se interzice copierea, difuzarea, imprumutarea sau utilizarea in alte scopuri, fara permisiunea Arex Lider Company ca proprietar al desenului.
This drawing is forbidden to be copied, lent or used in other purposes than those previously approved by Arex Lider Company as its owner.

D					
C					
B					
A					
Indice Index	Data Date	Modificare Modification/Revision	Proiectant Designer	Aprobat Consultant Approved Consultant	Aprobat CFR Approved CFR

GUVERNUL ROMANIEI
ROMANIAN GOVERNMENT

PROIECT FINANȚAT DE UNIUNEA EUROPEANĂ
EUROPEAN UNION FINANCED PROJECT

CLIENT / CLIENT

CFR

C.N.C.F. "C.F.R." - S.A.

ITALFERR
GRUPPO FERROVIE DELLO STATO
Joint Venture leader

Scott Wilson

OBERMEYER
PLANEN + BERATEN GmbH

TECNIC
Consulting Engineers

			Data Date	Semnătură Signature
Aprobat Approved	Şef proiect Project manager	R. Liuzza		
Aprobat Approved	Coordonator Secțiune 1 Section 1 Coordinator	C. Gambelli		
Verificat Checked	Expert Cheie Checking Expert	V. Kallidromitis		

SUBCONTRACTANT / SUBCONTRACTOR AREX Lider COMPANY

Aprobat Approved	Responsabil Subconsultant Subconsultant Responsible	A.Stanciu - Dinulescu	03.2012	
Întocmit Elaborated	Proiectant Designer	Secu Razvan	03.2012	

Reabilitarea liniei de cale ferata Braşov - Simeria, parte componentă a coridorului IV Pan European, pentru circulația trenurilor cu viteza maximă de 160 km/h,
Tronsonul : Braşov - Sighişoara
Rehabilitation of the railway line Braşov - Simeria, component Part of the IV Pan-European Corridor, for the trains circulation with maximum speed of 160 km/h,
Section : Braşov - Sighişoara

Proiect/Project
2004/RO/16/P/PA/003

Faza / Phase:
D.E. / E.D.

Denumire desen / Drawing Title : **INTERVAL/ SECTION CATA-ARCHITA**
VIADUCT km. 252+525.747 D=4X30.00m
Plan armare radier
Bridge km. 252+525.747 D=4X30.00m
Plan for raft reinforcement

Codificare / Codification System	Scara / Scale 1:50	LOT / LOT	Nr. / No 01 / 01

EA51 01 E 14 BC PV 03 1 2 012 0

297x1610