SECTIUNE B–B/B–B SECTION

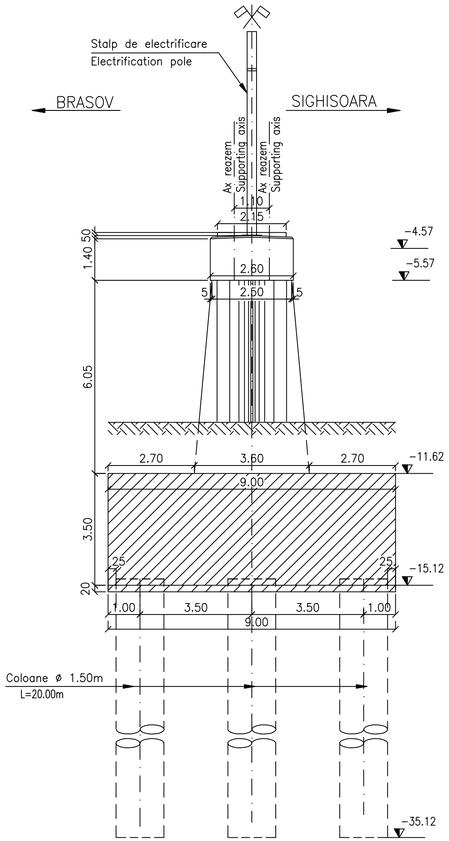

VEDERE A–A / A–A VIEW

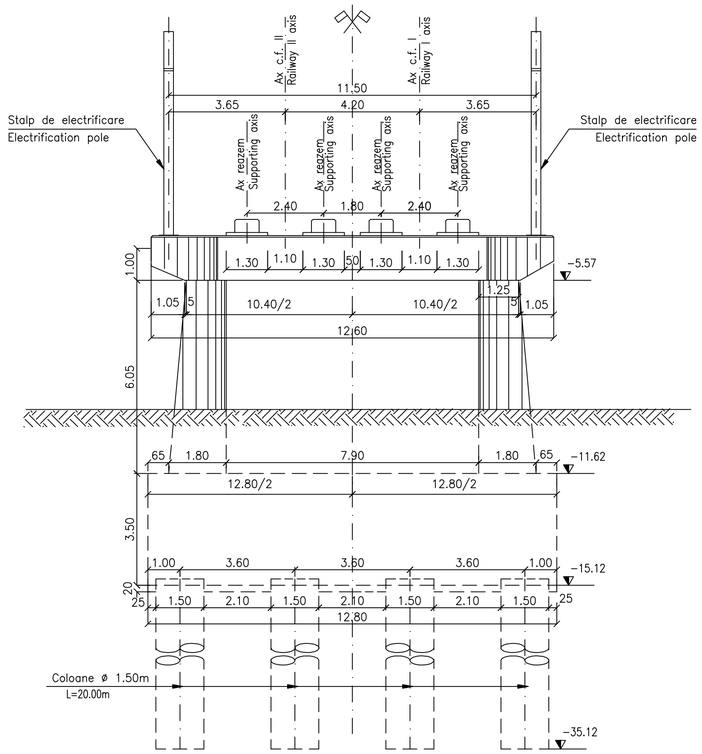

SECTIUNE C–C/C–C SECTION

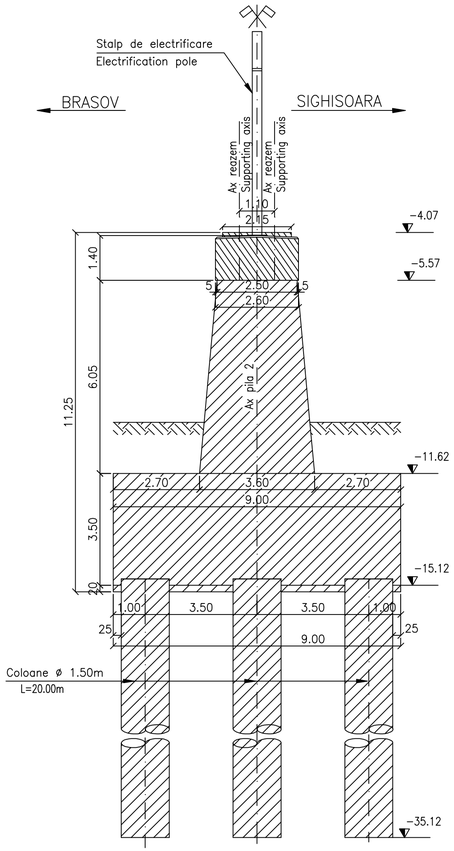

VEDERE IN PLAN / PLAN VIEW

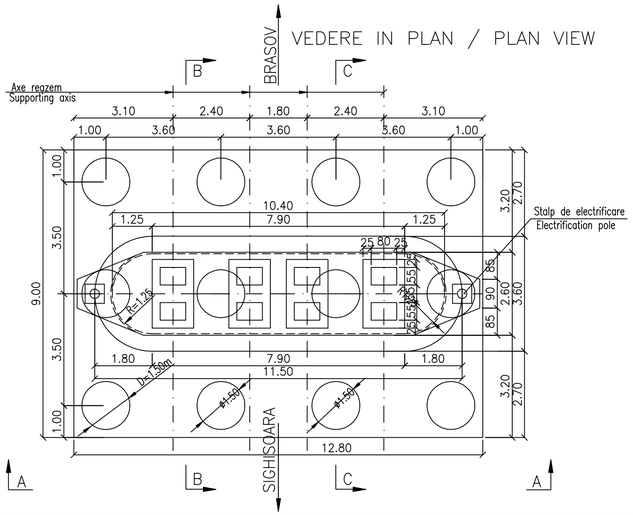

ATENTIE/ATENTION

Aprovizionarea aparatelor de reazem se va face inaintea executarii cuzinetilor si a banchetei acestora. In cazul in care inaltimea aparatelor de reazem aprovizionate difera fata de cea considerata in proiect se vor modifica inaltimile pe reazem corespunzator cu noile aparate.

The bearing blocks shall be supplied before building the bearings and their seats. In case the height of the supplied bearing blocks differs from that given in the project, the heights on the seats shall be adjusted so as to comply with the new devices.

LEGENDA BETOANELOR/CONCRETE LIST

Beton armat in cuzineti si in bancheta cuzinetilor
Reinforced concrete in the cushions and cushions bench
C 35/45–CEM I/A–S 52,5–(XC4+XF3+XA2)–A/C=0,50–D_{max}16–Cl 0,20

Beton armat in fundatii indirecte(coloane si radiere) si in elevatii:
Plain concrete in abutments foundations:
C 25/30–CEM H II/A–S 42,5–(XC4+XF3)–A/C=0,50–D_{max}32–Cl 0,20

Beton de egalizare
Concrete in the protection layer of the waterproofing
C 25/30–CEM II/A–S 32,5–(XF3)–A/C=0,55–D_{max}16–Cl 0,20

In cazul in care temperatura in timpul turnarii este scazuta, se vor folosi cimenturile cu rezistenta initiala mare, R si aditivi acceleratori, iar in cazul turnarii pe timp calduros, cimenturile cu rezistenta initiala uzuala, N si aditivi intarzietori (conf. NE 012/2–2010 si tabelului 2 din SR EN 197–1:2002)

When the temperature during the casting is low, cements with high initial resistance, R and accelerating additives shall be used and when it is cast during warm weather, cements with common initial resistance, N and delaying additives shall be used (according the norm NE 012/2–2010 and table 2 for the SR EN 197–1:2002).

NOTA:

1. Prezentul plan s–a intocmit in conformitate cu dispozitia generala
2. Convoaiele de calcul pentru infrastructura sunt LM 71 si SW/2.
3. La executie se vor respecta cu strictete prevederile din "Normativ pentru producerea betonului si executarea lucrarilor din beton, beton armat si beton precomprimat. Partea 1: Producerea betonului", indicativ NE 012/1–2007 si "Normativ pentru producerea betonului si executarea lucrarilor din beton, beton armat si beton precomprimat. Partea 2: Executarea lucrarilor din beton", indicativ NE 012/2–2010, iar verificarea calitatii lucrarilor si receptionarea lor se va face conform normativului C56–1985.
4. Constructia se incadreaza in categoria de importanta B (constructii de importanta deosebita), modelul 1–de asigurare a calitatii si clasa de importanta B, conform HG 766/1997.
5. Proiectul va fi verificat la exigentele A4.2; B2.2; D2.2.

NOTE:

1. This plan has been drawn up according to the general disposition.
2. The bridge corresponds to the UIC determination convoys (LM71 and SW/2).
3. The execution will strictly comply with the provisions of "Practice code for the concrete production and works execution, reinforced and pre–stressed concrete – Part 1: Practice code for concrete production" NE 012/1–2007 and "Practice code for the concrete production and works execution, reinforced and pre–stressed concrete – Part 2: The execution of concrete works." NE 012/2–2010, and the quality and the reception of the works shall be made accordingly to Norm C 56–1985.
4. The construction has been classified in B category of importance (high important constructions), model 1–ensuring the quality and class of importance B according to G.O. 766/97.
5. The project will be checked in order to comply with the A4.2; B2.2; D2.2 requirements.

This drawing is forbidden to be copied, lent or used in other purposes than those previously approved by AREX *Lider* Company as its owner.
Se interzice copierea, difuzarea, imprumutarea sau utilizarea in alte scopuri, fara permisiunea AREX *Lider* Company ca proprietar al desenului.

Indice Index	Data Date	Modificare Modification/Revision	Proiectant Designer	Aprobat Consultant Approved Consultant	Aprobat CFR Approved CFR
D					
C					
B					
A	12.2011	Revizia 1 1 Revision	Cristina Vasiliu		

GUVERNUL ROMANIEI
ROMANIAN GOVERNMENT

PROIECT FINANŢAT DE UNIUNEA EUROPEANĂ
EUROPEAN UNION FINANCED PROJECT

CLIENT / CLIENT

C.N.C.F. "C.F.R." - S.A.

ITALFERR GRUPPO FERROVIE DELLO STATO *Joint Venture leader*
Scott Wilson
OBERMEYER PLANEN + BERATEN GmbH
TECNIC Consulting Engineers

CONSULTANT / CONSULTANT

			Data Date	Semnaturii Signature
Aprobat Approved	Şef proiect Project manager	R. Liuzza		
Aprobat Approved	Coordonator Secţiune 1 Section 1 Coordinator	C. Gambelli		
Verificat Checked	Expert Cheie Checking Expert	V.Kallidromitis		

SUBCONTRACTANT / SUBCONTRACTOR

AREX

Aprobat Approved	Responsabil Subconsultant Subconsultant Responsible	A. Dinulescu Stanciu	10.2011	
Întocmit Elaborated	Proiectant Designer	Cristina Vasiliu	10.2011	

Reabilitarea liniei de cale ferata Braşov - Simeria, parte componentă a coridorului IV Pan European, pentru circulaţia trenurilor cu viteza maximă de 160 km/h,
Tronsonul : Braşov - Sighişoara
Rehabilitation of the railway line Braşov - Simeria, component Part of the IV Pan-European Corridor, for the trains circulation with maximum speed of 160 km/h,
Section : Braşov - Sighişoara

Proiect/Project *2004/RO/16/P/PA/003*

Faza / Phase: P.Th. / T.D.

Denumire desen / Drawing Title :

INTERVAL / SECTION CATA-ARCHITA
Viaduct Km 252+525.747- D= 4x30.00m
PLAN COFRAJ PILA 3 / 3 CELL DECKING PLAN

Codificare / Codification System	Scara / Scale 1:100	LOT / LOT	Nr. / No 01 / 01
E A 5 1 0 1 E 1 4 B B P V 0 3 1 2 0 0 7 1			

420x780