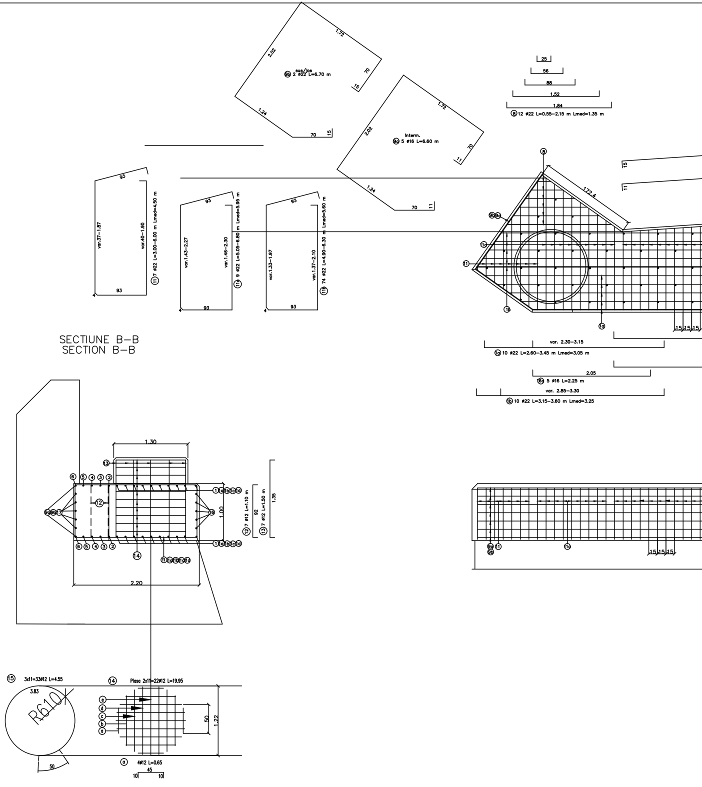
2.02
1.72
sus/jos
9b 2 ø22 L=6.70 m
70
15
1.24
70
15
2.02
1.72
Interm.
9a 5 ø16 L=6.60 m
70
11
1.24
70
11
25
56
88
1.52
1.84
8 12 ø22 L=0.55–2.15 m Lmed=1.35 m
93
var.37–1.87
var.40–1.90
93
4
11 7 ø22 L=3.00–6.00 m Lmed=4.50 m
93
var.1.43–2.27
var.1.46–2.30
93
4
11a 9 ø22 L=5.05–6.80 m Lmed=5.95 m
93
var.1.33–1.97
var.1.37–2.10
93
4
11b 74 ø22 L=4.90–6.30 m Lmed=5.60 m
8
172.4
15
11
9b 9a
1a
11
1b
1a
15 15 15
var. 2.30–3.15
1a 10 ø22 L=2.60–3.45 m Lmed=3.05 m
2.05
16a 5 ø16 L=2.25 m
var. 2.85–3.30
1b 10 ø22 L=3.15–3.60 m Lmed=3.25
1.30
13
6 5 4 3 2
1 1a 1b 1c 1d
12
9a 9b 17
16
1.00
12 7 ø12 L=1.10 m
92
13 7 ø12 L=1.50 m
1.35
6 5 4 3 2
1 1a 1b 1c 1d
14
11 1a 1b 1c 1e
2.20
9a 9b 11
1a
15 15 15
15 3x11=33ø12 L=4.55
3.83
R610
50
14 Plasa 2x11=22ø12 L=19.95
e
d
c
b
a
50
1.22
a 4ø12 L=0.65
45
10
10

SECTIUNE B–B
SECTION B–B

EXTRAS DE ARMATURA PENTRU O PLASA

MARCA	DIAMETRU	BUC. ASEMENEA	LUNGIME PE BUCATA	LUNGIME/ø PC 52 ø12
a	12	4	0.65	2.25
b	12	4	1.00	4.00
c	12	4	1.30	5.20
d	12	4	1.40	5.60
e	12	2	1.45	2.90
LUNGIMI PE DIAMETRU (m)				19.95

VEDERE IN PLAN H-H/H-H VIEW

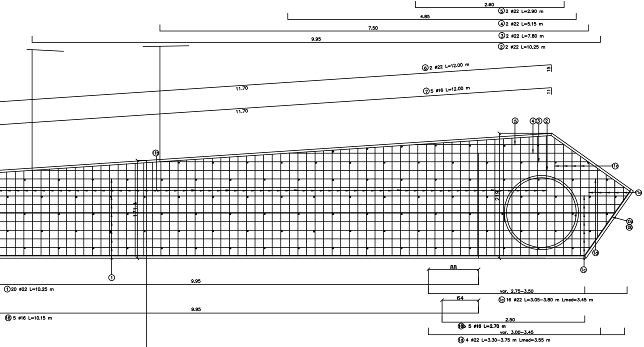
2.60
⑤ 2 ø22 L=2.90 m
4.85
④ 2 ø22 L=5.15 m
7.50
③ 2 ø22 L=7.80 m
9.95
② 2 ø22 L=10.25 m
⑥ 2 ø22 L=12.00 m
11.70
15
⑦ 5 ø16 L=12.00 m
11.70
11
⑤
④
③
②
1b
1c
2.19
1.71
1e
10a
10b
1d
1c
①
9.95
① 20 ø22 L=10.25 m
88
var. 2.75–3.50
1c 16 ø22 L=3.05–3.80 m Lmed=3.45 m
9.95
16 5 ø16 L=10.15 m
64
2.50
16b 5 ø16 L=2.70 m
var. 3.00–3.45
1d 4 ø22 L=3.30–3.75 m Lmed=3.55 m

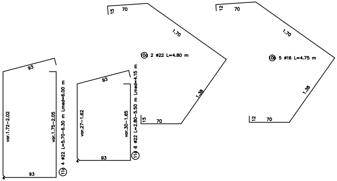
93
var.1.72–2.02
var.1.75–2.05
93
11a 4 ø22 L=5.70–6.30 m Lmed=6.00 m
93
var.27–1.62
var.30–1.65
93
11b 6 ø22 L=2.80–5.50 m Lmed=4.15 m
15
70
1.70
10a 2 ø22 L=4.80 m
1.38
15
70
12
70
1.70
10b 5 ø16 L=4.75 m
1.38
12
70

ARMAREA CUZINETILOR ŞI A BANCHETEI CUZINETILOR/CUSHION REINFORCEMENT

VEDERE DIN FATA A-A
A-A VIEW

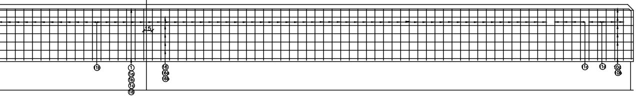
15
1b
①
1a
1b
1c
1d
16
16a
16b
1e
1c
10a
10b

SECTIUNE/SECTION B1-B1

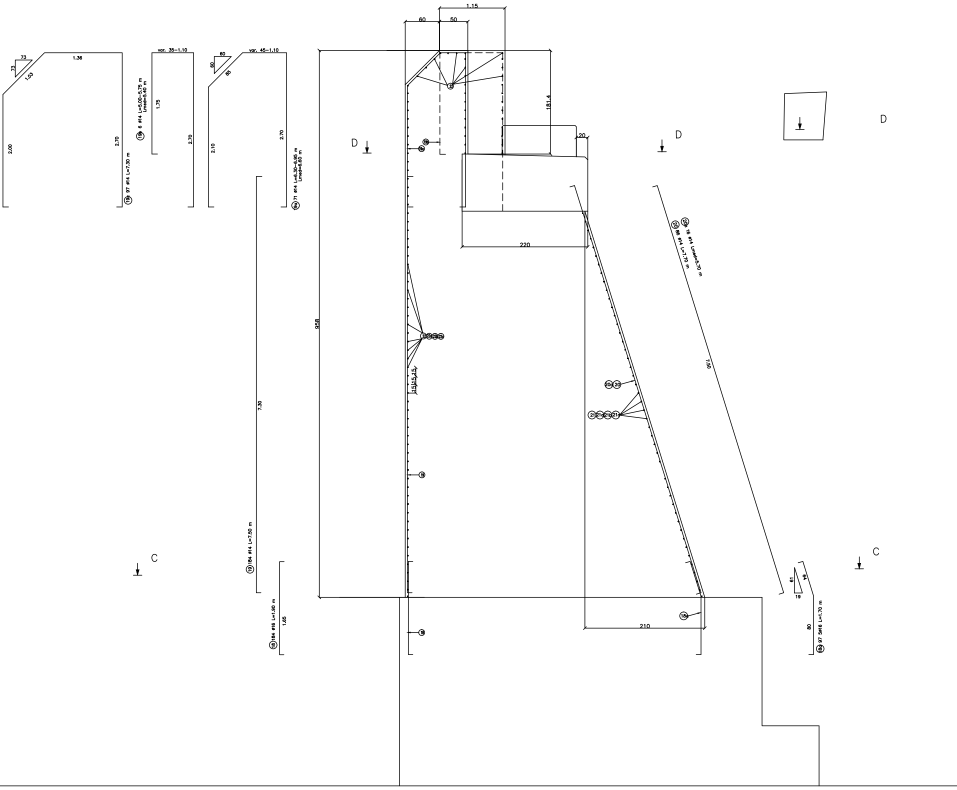

73
73
1.03
1.36
2.00
2.70
(19c) 97 ø14 L=7.30 m
(19b) 6 ø14 L=5.00-5.75 m Lmed=5.40 m
var. 35-1.10
1.75
2.70
60
60
85
var. 45-1.10
2.10
2.70
(9a) 71 ø14 L=6.30-6.95 m Lmed=6.60 m
7.30
(19) 184 ø14 L=7.50 m
(18) 184 ø16 L=1.90 m
1.65
C
C
D
D
D
1.15
60
50
181.4
20
220
958
15 15 15
210
7.50
(20a) 16 ø14 Lmed=5.70 m
(20) 86 ø14 L=7.70 m
20a 20
21 21a 21b 21c
22 22a 22b 22c
22
19
19a
19
19
18a
61
64
19
80
(18a) 97 5ø16 L=1.70 m

SECTIUNE/SECTION B2–B2

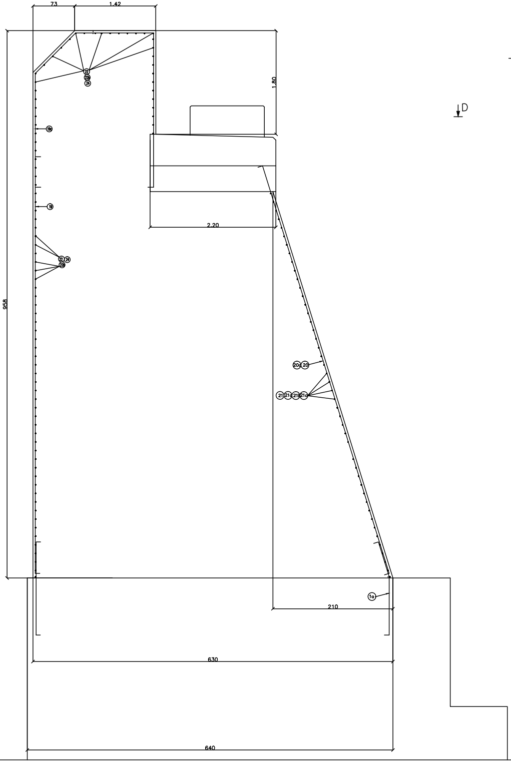
73
1.42
1.80
22
22b
24
19c
19
2.20
22
24
22b
958
20c
20
21
21a
21b
21c
1a
210
630
640

ARMAREA ELEVATIEI/REINFORCEMENT ELEVATION

VEDERE DIN FATA A1–A1
A–A VIEW

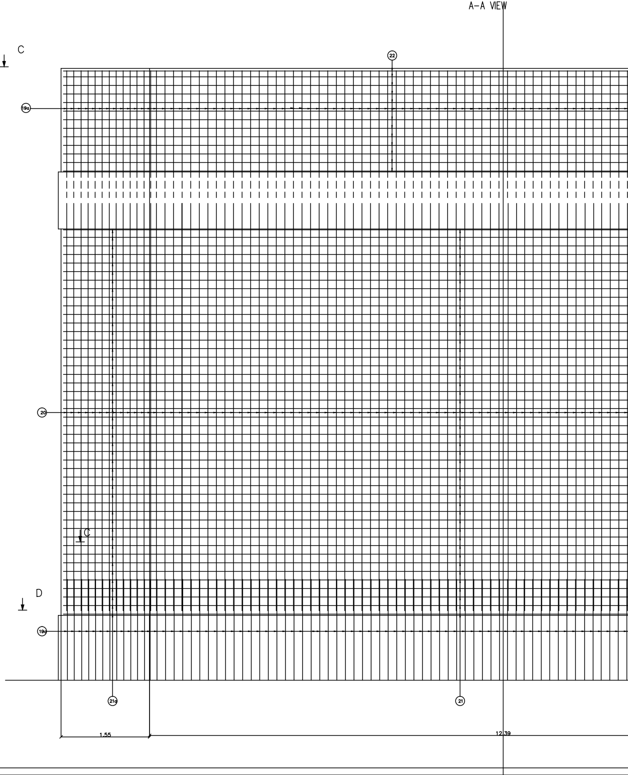
C
D
22
19a
20
C
D
19a
21a
21
1.55
12.39

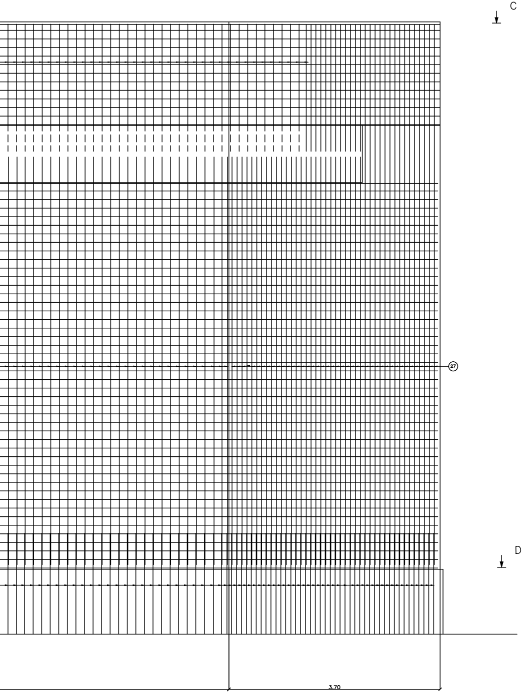

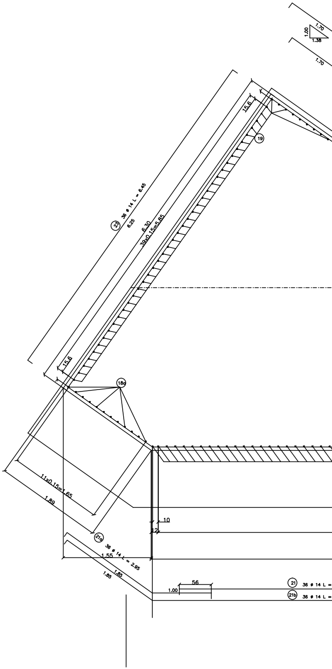
1.70
1.00
1.38
1.70
15.6
19
23 36 ø 14 L = 6.45
6.25
6.30
39x0.15=5.85
15.6
18a
11x0.15=1.65
1.89
10
12
21a 36 ø 14 L = 2.95
1.55
1.85
1.85
56
1.00
21 36 ø 14 L =
21b 36 ø 14 L =

VEDERE IN PLAN C-C/VIEW

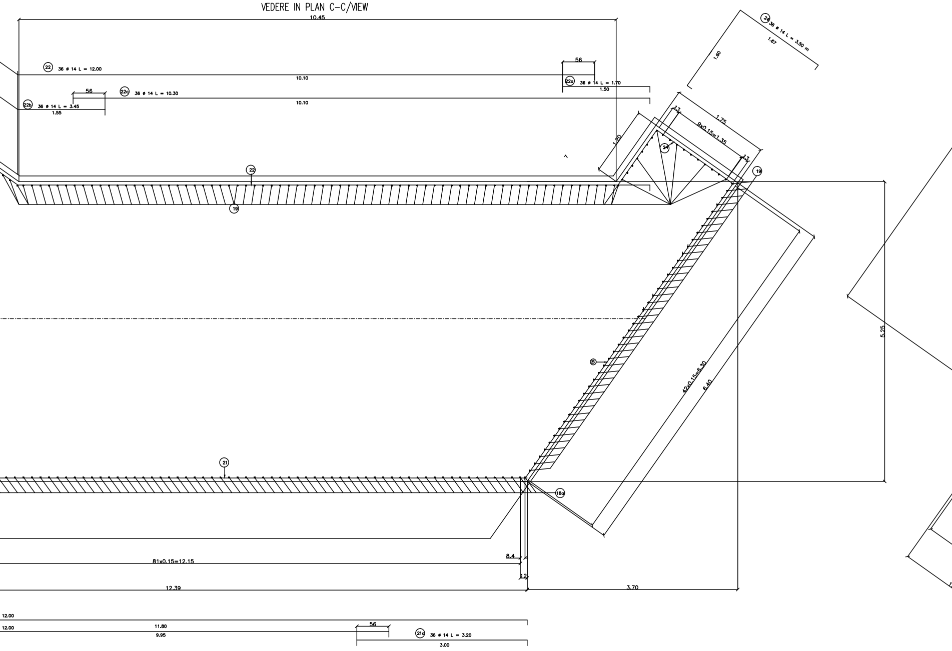
10.45
㉒ 36 ø 14 L = 12.00
10.10
56
22a 36 ø 14 L = 1.70
1.50
22c 36 ø 14 L = 10.30
56
22b 36 ø 14 L = 3.45
1.55
10.10
㉒
⑲
㉔ 36 ø 14 L = 3.50 m
1.67
1.60
1.75
13
9x0.15=1.35
1.20
㉔
13
⑲
5.25
㉓
42x0.15=6.30
6.40
㉑
18a
8.4
81x0.15=12.15
12
12.39
3.70
12.00
12.00
11.80
9.95
56
21c 36 ø 14 L = 3.20
3.00

VEDERE IN PLAN D-D/D-D VIEW

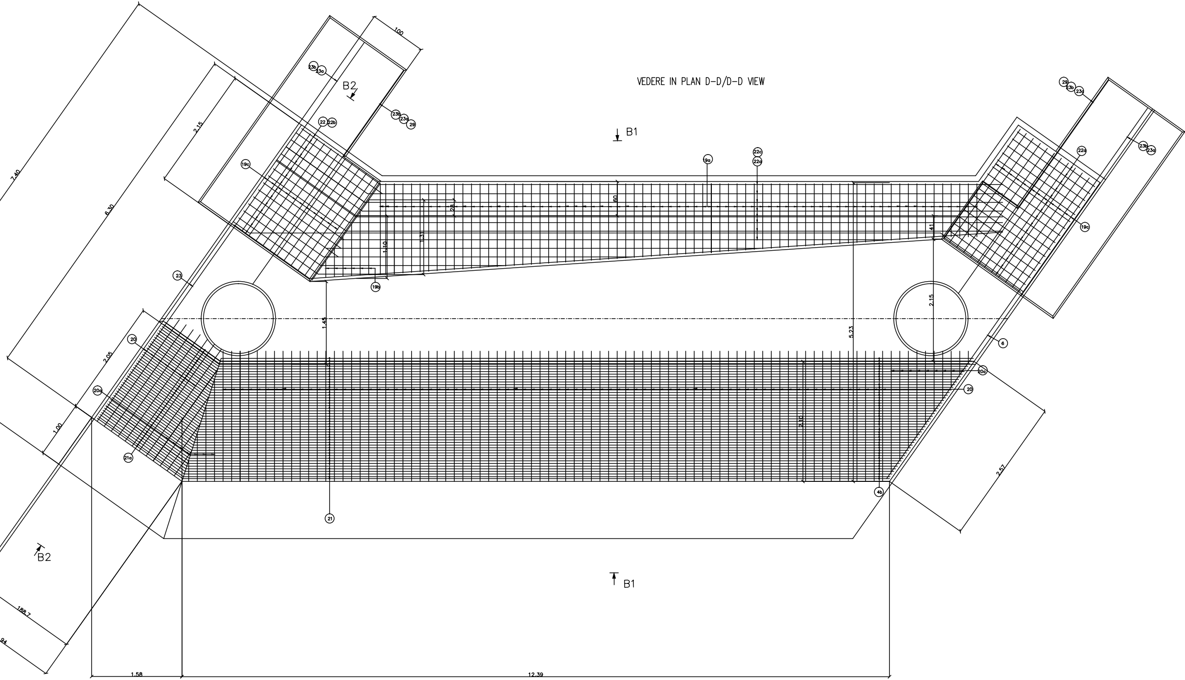

B1
B1
B2
B2
7.40
6.30
2.15
100
2.05
1.00
188.7
94
1.58
12.39
1.45
1.10
1.3
1.28
60
5.23
41
2.15
2.10
2.57
23b
23a
23b
23a
29
22
22b
19c
23
20
20a
21a
21
19b
9a
22c
22a
29
23b
23a
22a
23b
23a
19c
6
20a
20
4b

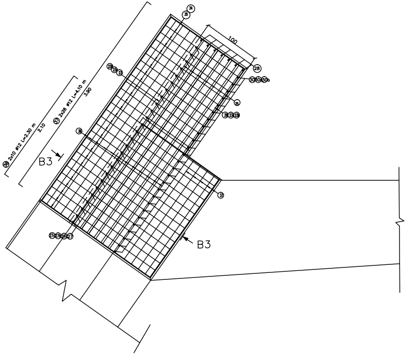

㉞
㉟
100
㉘
㉚㉚㉚b
㉕
㉘㉓㉓
㉓㉓㉓
㉖ 2x10 ø12 L=2.30 m
2.10
㊲ 2x26 ø12 L=4.10 m
3.90
㊱
B3
B3
㊲
㉗㉗㉗㉗

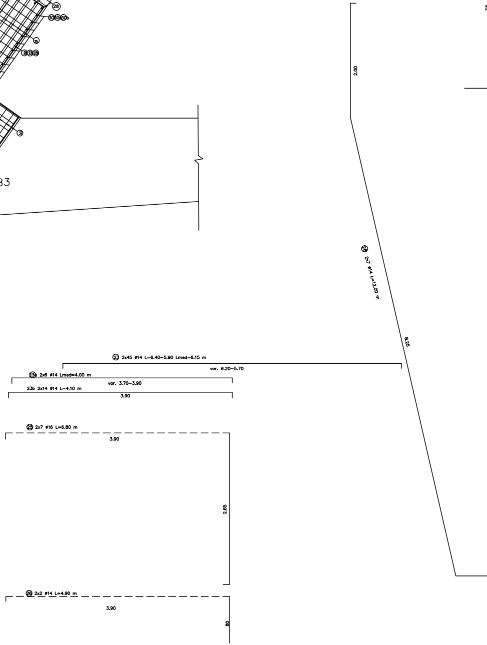

2.00
㉘ 2x7 ø14 L=12.00 m
8.25
1.50
㉓ 2x45 ø14 L=6.40-5.90 Lmed=6.15 m
var. 6.20-5.70
㉓a 2x6 ø14 Lmed=4.00 m
var. 3.70-3.90
23b 2x14 ø14 L=4.10 m
3.90
㉕ 2x7 ø16 L=6.80 m
3.90
2.65
㉖ 2x2 ø14 L=4.90 m
3.90
80

VEDERE/VIEW E-E

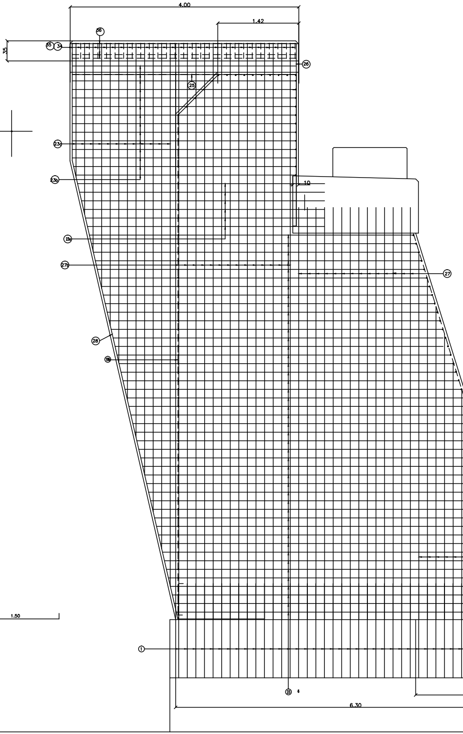

4.00
1.42
㊱
35
㉟ ㉞
㉖
㉕
23a
23b
10
㉓
27b
㉗
㉘
①
㉓
6.30

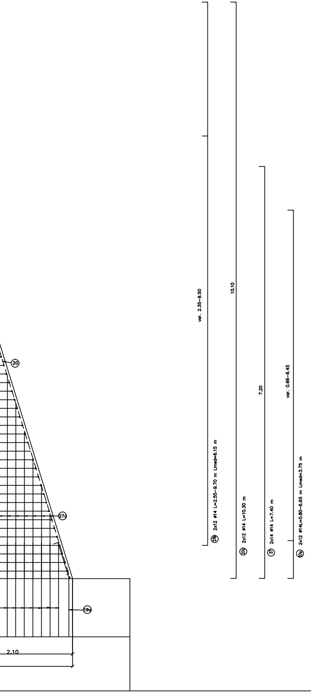
20
27c
19a
2.10
var. 2.35–9.50
10.10
7.20
var. 0.66–6.45
27b 2x12 ø14 L=2.55–9.70 m Lmed=6.15 m
27c 2x12 ø14 L=10.30 m
27 2x14 ø14 L=7.40 m
27a 2x12 ø14L=0.80–6.65 m Lmed=3.75 m

SECTIUNE/SECTION B3-B3

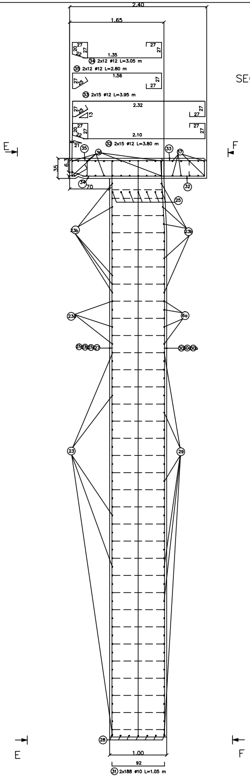
2.40
1.65
1.35
34 2x12 ø12 L=3.05 m
35 2x12 ø12 L=2.80 m
1.56
33 2x15 ø12 L=3.95 m
2.32
2.10
32 2x15 ø12 L=3.80 m
20
22
27
25
13
21
35
36
33
37
34
32
6.3
35
70
25
23b
23a
6a
27a 27b 27c 27
30 30a 30b
23
29
28
1.00
92
31 2x188 ø10 L=1.05 m
E
F

VEDERE/VIEW F-F

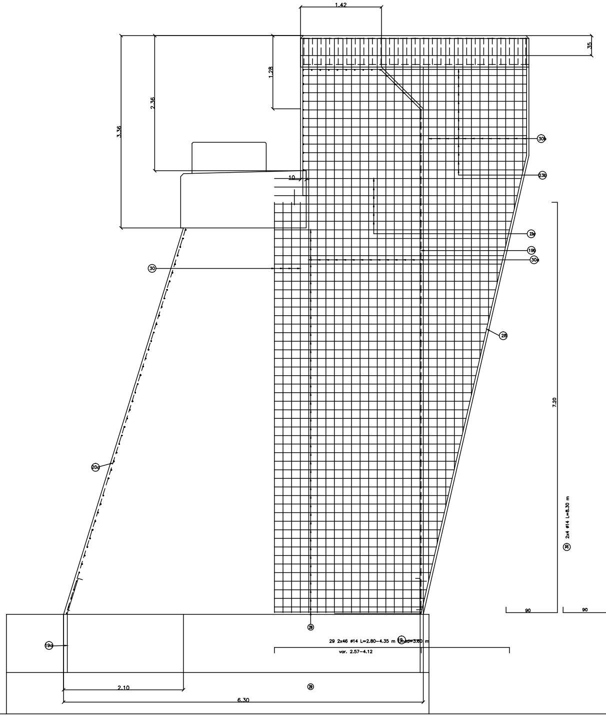
1.42
35
1.28
2.36
3.36
10
30b
23b
23a
19b
30a
30
28
20a
7.20
30 2x4 ø14 L=8.30 m
90
90
19a
29
29 2x46 ø14 L=2.80–4.35 m Lmed=3.60 m
19
var. 2.57–4.12
2.10
6.30

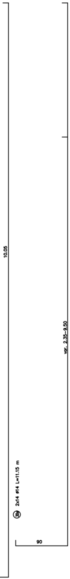
10.05
var. 2.35–9.50
90
30a 2x14 ø14 L=11.15 m
30b 2x12 ø14 L=3.45–10.60 Lmed=7.00 m

EXTRAS DE ARMATURA PENTRU O CULEE
REINFORCEMENT FOR ONE ABUTMENT

Marca	Ï	Buc	Lung/buc(m)	S355			S345	
				Ï 10	Ï 12	Ï 14	Ï 16	Ï 22
1	22	20	10.25					205,00
1a	22	10	3,05					30,50
1b	22	10	3,25					32,50
1c	22	16	3,45					55.20
1d	22	4	3,55					14,20
2	22	2	10,25					20,50
3	22	2	7,80					15,60
4	22	2	5,15					10,30
5	22	2	2,90					5,80
6	22	2	12,00					24,00
7	16	5	12,00				60,00	
8	22	12	Lmed=1,35					16,20
9a	16	5	6,60				33,00	
9b	22	2	6,70					13,40
10a	22	2	5,90					11,80
10b	16	5	5,60				28,00	
11	22	7	4,50					31,50
11a	22	9	5,95					53,55
11b	22	74	5,60					414,40
11c	22	4	6,00					24,00
11d	22	6	4,15					24,90
12	12	144	1,10		158,40			
13	12	72	1,05		108,00			
14	22	12	13,30					159,60
15	22	22	3,05					67,10
16	16	5	10,15				50,75	
16a	16	5	2,25				11,25	
16b	16	5	2,70				13,50	
17	16	5	10,15				50,75	
18	16	184	1,90				349,60	
18a	16	95	1,90				180,50	
19	14	184	7,50			1380,00		
19a	14	71	6,60			468,60		
19b	14	6	5,40			32,40		
19c	14	24	7,30			175,20		
20	14	86	7,70			662,20		
20a	14	16	5,70			91,20		
21	14	36	12,00			432,00		
21a	14	36	5,95			214,20		
21b	14	36	12,00			432,00		
21c	14	36	3,20			115,20		
22	14	36	12,00			432,00		
22a	14	36	1,70			61,20		
22b	14	36	3,45			124,20		
22c	14	36	10,30			370,80		
23	14	90	6,15			553,50		
23a	14	12	4,00			48,00		
23b	14	28	4,10			114,80		
24	14	36	3,50			126,00		
25	16	14	6,80				95,20	
26	14	4	4,90			19,60		
27	14	28	7,40			207,20		
27a	14	24	3,75			90,00		
27b	14	24	6,15			147,60		
27c	14	24	10,30			247,20		
28	14	14	12,00			168,00		
29	14	92	3,60			331,20		
30	14	8	8,30			66,40		
30a	14	28	11,15			312,20		
30b	14	24	7,00			168,00		
31	10	376	1,05	349,80				
32	12	30	3,80		114,00			
33	12	30	3,95		118,50			
34	12	24	3,05		73,20			
35	12	24	2,80		67,20			
36	12	20	2,30		46,00			
37	12	52	4,10		213,20			
LUNGIMI/Ï (m)				349,80	898,50	7590,90	872,55	1235,05
GREUTATI/ML (kg)				0,617	0,888	1,208	1,578	2,984
GREUTATI/Ï				216	798	9170	1377	3686
GREUTATI PE TIP DE OTEL (kg)				3455			5063	
PIERDERI 5% (kg)				425				
GREUTATE TOTALA CULEE (kg)				8943 rot. 8950				

TOTAL 2 CULEI /TOTAL 2 ABUTMENTS : 2 x 8950kg=17900kg

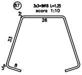
87
3x3=9Ø16 L=1.25
scara 1:10
26
33
3.5
8
3.5

D E T A L I U L "a"

placuta pentru presa
scara 1:25

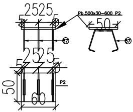
25
25
5
5
Pb.500x30–600 P2
50
87
87
25
25
5
5
50
60
P2

PLACUTE PENTRU PRESE

Poz. Piece	Denumirea materialului	Buc.	Sectiune Section	Lung. Long. (mm)	Sectiune/Section		
					kg/ml	kg/buc	kg
P1	Placuta Placuta	3	500x30	600	117.80	58.90	177
					Total partial		177
					Sudura 2% Welding 2%		4
					TOTAL kg		181

Beton armat/Reinforced concrete:	– C35/45 bancheta, zid de garda/ bench,wall guard – C25/30 elevatie, ziduri intoarse/ elevation, reverted walls
Armatura / reinforcement:	–S355 (PC 52; ø10–ø14) –S345 (PC 52; ø16)
Strat de acoperire/concrete cover	– min. 4cm expunere in aer/air exposed

Se interzice copierea, difuzarea, imprumutarea sau utilizarea in alte scopuri, fara permisiunea AREX Lider Company ca proprietar al desenului.
This drawing is forbidden to be copied, lent or used in other purposes than those previously approved by AREX Lider Company as its owner.

D					
C					
B					
A					
Indice Index	Data Date	Modificare Modification/Revision	Proiectant Designer	Aprobat Consultant Approved Consultant	Aprobat CFR Approved CFR

GUVERNUL ROMANIEI
ROMANIAN GOVERNMENT

PROIECT FINANŢAT DE UNIUNEA EURO
EUROPEAN UNION FINANCED PR

CLIENT / CLIENT

C.N.C.F. "C.F.R." - S.A.

GRUPPO FERROVIE DELLO STATO
Joint Venture leader

CONSULTANT / CONSULTANT

			Data Date	Semnătură Signature
Aprobat Approved	Şef proiect Project manager	R. Liuzza		
Aprobat Approved	Coordonator Secţiune 1 Section 1 Coordinator	C. Gambelli		
Verificat Checked	Expert Cheie Checking Expert	V. Kallidromitis		VK

SUBCONTRACTANT / SUBCONTRACTOR

Aprobat Approved	Responsabil Subconsultant Subconsultant Responsible	A.Stanciu - Dinulescu	02.2012	
Întocmit Elaborated	Proiectant Designer	Adrian Sabo	02.2012	

Reabilitarea liniei de cale ferata Braşov - Simeria, parte componentă a coridorului IV Pan European, pentru circulaţia trenurilor cu viteza maximă de 160 km/h,
Tronsonul : Braşov - Sighişoara
Rehabilitation of the railway line Braşov - Simeria, component Part of the IV Pan-European Corridor, for the trains circulation with maximum speed of 160 km/h,
Section : Braşov - Sighişoara

Proiect/Project
2004/RO/16/P/PA/003

Faza / Phase:
D.E. / E.D.

Denumire desen / Drawing Title :

INTERVAL / SECTION: ARCHITA–VANATORI
POD/BRIDGE Km.261+417.202 L=35.00m
PLAN ARMARE CULEI TABLIER
ABUTMENTS REINFORCEMENT DECK PLAN

Codificare / Codification System	Scara / Scale 1:25	LOT / LOT	Nr. / No 01 / 01

EA51 01 E 16 BC PV 03 6 2 005 0