ELEVATIE A–A/A–A ELEVATION

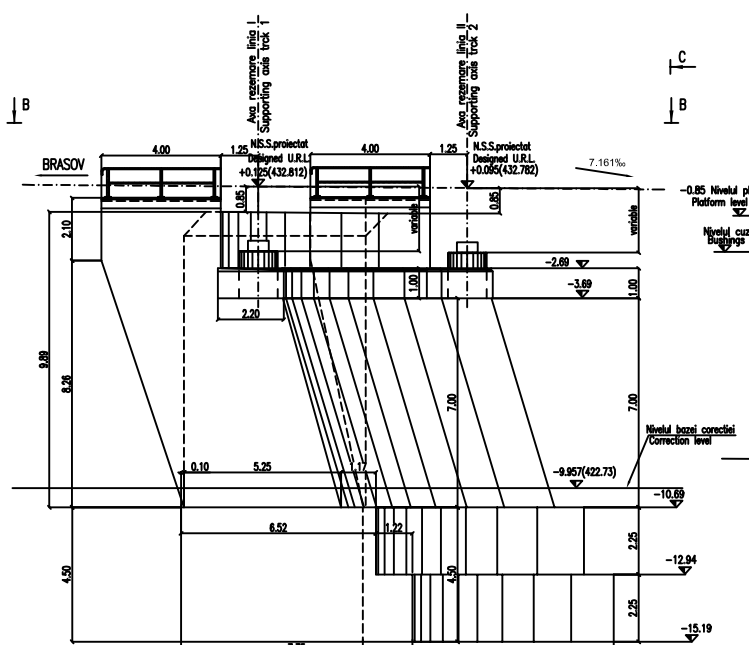

VEDERE IN PLAN B–B/B–B PLAN VIEW

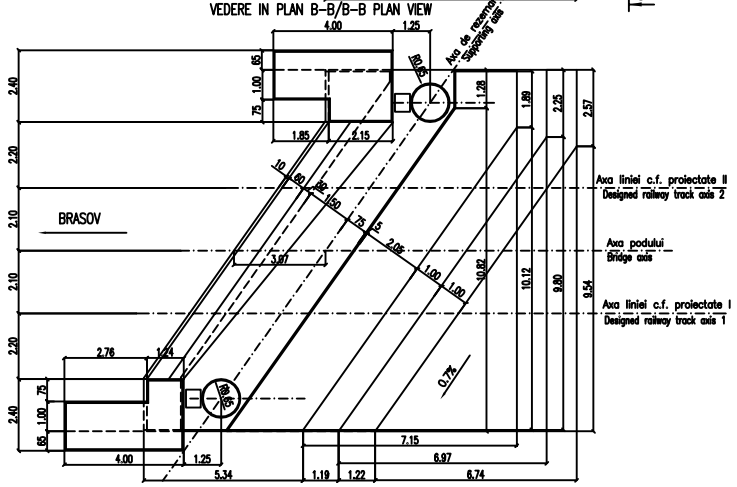

VEDERE C–C/C–C FRONT VIEW

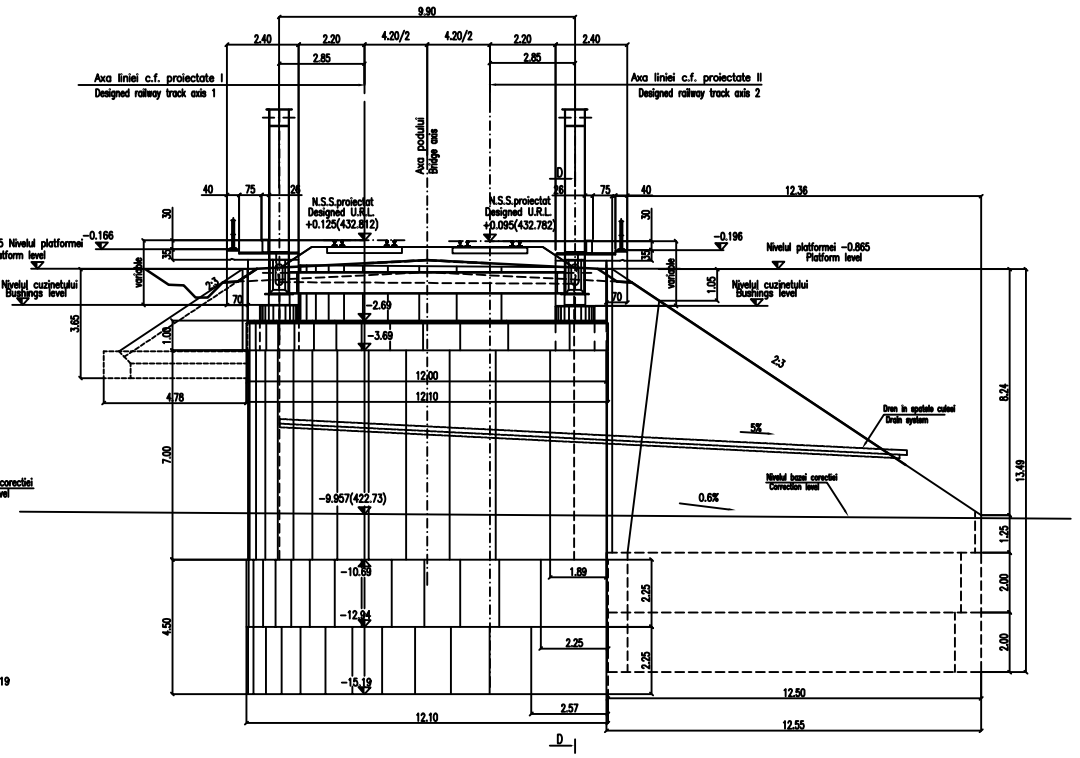

SECTIUNE D–D/D–D CROSS SECTION

NOTA:
Umplutura face parte din lucrarile de poduri.
Stratul de forma inclusiv geo-textile, geo-grilele si colea fac parte din alt lot.

NOTE:
The Backfill is partb of the bridge work.
Protection formation layer incl. geotextile and geogrid and track is part of another lot.

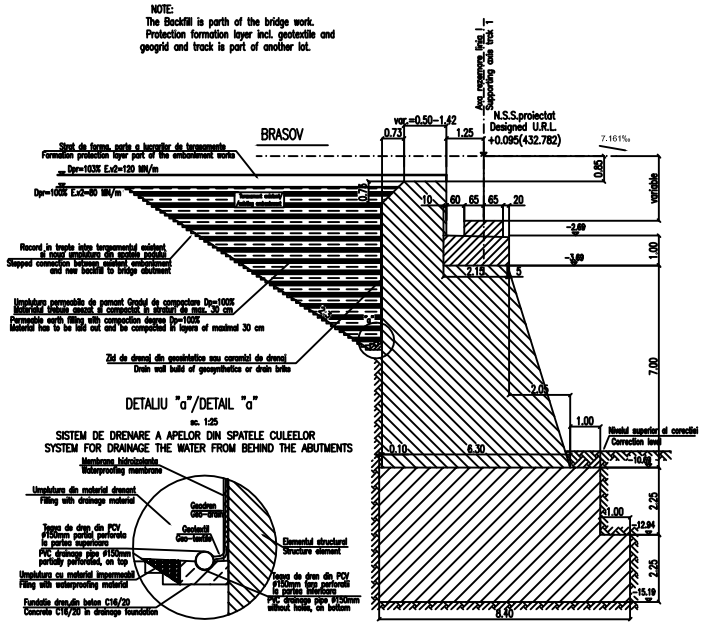

DETALIU "a"/DETAIL "a"

sc. 1:25

SISTEM DE DRENARE A APELOR DIN SPATELE CULEELOR
SYSTEM FOR DRAINAGE THE WATER FROM BEHIND THE ABUTMENTS

NOTA:

1. Prezentul plan s–a intocmit in conformitate cu dispozitia generala.
2. Podul coresponde la convoaiele de calcul UIC(LM 71 si SW/2).
3. La executie se vor respecta cu strictete prevederile din "Normativ pentru producerea betonului si executarea lucrarilor din beton, beton armat si beton precomprimat. Partea 1: Producerea betonului", indicativ NE 012/1–2007 si "Normativ pentru producerea betonului si executarea lucrarilor din beton, beton armat si beton precomprimat. Partea 2: Executarea lucrarilor din beton", indicativ NE 012/2–2010, iar verificarea calitatii lucrarilor si receptionarea lor se va face conform normativului C56–1985.
4. Constructia se incadreaza in categoria de importanta B (constructii de importanta deosebita), modelul 1–de asigurare a calitatii si clasa de importanta B, conform HG 766/1997.
5. Proiectul va fi verificat la exigentele A4.2; B2.2; D2.2.

ATENTIE/ATENTION

Aprovizionarea aparatelor de reazem se va face inaintea executarii cuzinetilor si a banchetei acestora. In cazul in care inaltimea aparatelor de reazem aprovizionate difera fata de cea considerata in proiect se vor modifica inaltimile pe reazem corespunzator cu noile aparate.

The bearing blocks shall be supplied before building the bearings and their seats. In case the height of the supplied bearing blocks differs from that given in the project, the heights on the seats shall be adjusted so as to comply with the new devices.

NOTE:

1. This plan has been drawn up according to the general disposition.
2. The bridge corresponds to the UIC determination convoys (LM71 and SW/2).
3. The execution will strictly comply with the provisions of "Practice code for the concrete production and works execution, reinforced and pre–stressed concrete – Part 1: Practice code for concrete production" NE 012/1–2007 and "Practice code for the concrete production and works execution, reinforced and pre–stressed concrete – Part 2: The execution of concrete works." NE 012/2–2010, and the quality and the reception of the works shall be made accordingly to Norm C 56–1985.
4. The construction has been classified in B category of importance (high important constructions), model 1–ensuring the quality and class of importance B according to G.O. 766/97.
5. The project will be checked in order to comply with the A4.2; B2.2; D2.2 requirements.

LEGENDA BETOANELOR/CONCRETE LIST

Beton armat in cuzineti si in bancheta cuzinetilor
Reinforced concrete in the cushions and cushions bench
C 35/45–CEM I/A–S 52,5–(XC4+XF3+XA2)–A/C=0,50–D 16–Cl 0,20

Beton armat in elevatie si in zidurile intoarse
Reinforced concrete in the elevation infrastructure and reverted walls
C 25/30–Ciment H II/A–S 42,5–(XC4+XF3)–A/C=0,50–D 32–Cl 0,20

Beton simplu in fundatii:
Plain concrete in abutments foundations:
C 25/30–Ciment H II/A–S 42,5–(XF3)–A/C=0,50–D 32–Cl 0,20

Beton in stratul de protectie al hidroizolatiei
Concrete in the protection layer of the waterproofing
C 25/30–Ciment II/A–S 32,5–(XC4+XF3)–A/C=0,50–D 16–Cl 0,20

In cazul in care temperatura in timpul turnarii este scazuta, se vor folosi cimenturile cu rezistenta initiala mare, R si aditivi acceleratori, iar in cazul turnarii pe timp caldurosa, cimenturile cu rezistenta initiala uzuala, N si aditivi intarzietori (conf.NE 012/2–2010 si tabelului 2 din SR EN 197–1:2002)

When the temperature during the casting is low, cements with high initial resistance, R and accelerating additives shall be used and when it is cast during warm weather, cements with common initial resistance, N and delaying additives shall be used (according the norm NE 012/2–2010 and table 2 for the SR EN 197–1: 2002).

Se interzice copierea, difuzarea, imprumutarea sau utilizarea in alte scopuri, fara permisiunea AREXÄdder Company ca proprietar al desenului.
This drawing is forbidden to be copied, lent or used in other purposes than those previously approved by AREXÄdder Company as its owner.

Indice / Index	Data / Date	Modificare / Modification/Revision	Proiectant / Designer	Aprobat Consultant / Approved Consultant	Aprobat CFR / Approved CFR
D					
C					
B					
A	12.2011	Revizia 1 / Revision 1	Florea Valentin		

GUVERNUL ROMANIEI / ROMANIAN GOVERNMENT — PROIECT FINANTAT DE UNIUNEA EUROPEANA / EUROPEAN UNION FINANCED PROJECT

C.N.C.F. "C.F.R." - S.A.

CLIENT / CLIENT

Joint Venture leader

CONSULTANT / CONSULTANT

			Data / Date	Semnatura / Signature
Aprobat / Approved	Şef proiect / Project manager	R. Liuzza		------
Aprobat / Approved	Coordonator Secţiune 1 / Section 1 Coordinator	C. Gambelli		------
Verificat / Checked	Expert Cheie / Checking Expert	V. Kalliidromitis		

SUBCONTRACTANT / SUBCONTRACTOR ---

Aprobat / Approved	Responsabil Subconsultant / Subconsultant Responsible	A. Dinulescu Stanciu	11.2011	------
Intocmit/Elaborated	Proiectant/Designer	Valentin Florea	11.2011	

Reabilitarea liniei de cale ferata Braşov – Simeria, parte componentă a coridorului IV Pan European, pentru circulaţia trenurilor cu viteza maximă de 160 km/h,
Tronsonul : Braşov - Sighişoara
Rehabilitation of the railway line Braşov - Simeria, component Part of the IV Pan-European Corridor, for the trains circulation with maximum speed of 160 km/h,
Section : Braşov - Sighişoara

Proiect/Project 2004/RO/16/P/PA/003

Faza / Phase: P.Th. / P.Th

Denumire desen / Drawing Title : **INTERVAL/SECTION ARCHITA–VANATORI**
POD Km.262+004.302 L=35,00m/ELEMENETE GEOMETRICE
CULEEA "BRASOV"
BRIDGE Km.262+004.302 L=35.00m/"BRASOV" ABUTMENT
FORMWORK DRAW

Codificare / Codification System: E A 5 1 | 0 1 | E | 1 6 | B B | P V | 0 3 | 7 | 0 | 0 0 3 | 1

Scara / Scale 1:100; 1:25 | LOT / LOT | Nr. / No. 01 / 01

420x1048