ATENTIE/ATENTION: Aprovizionarea aparatelor de reazem se va face inaintea executarii cuzinetilor si a banchetei acestora. In cazul in care inaltimea aparatelor de reazem aprovizionate difera fata de cea considerata in proiect se vor modifica inaltimile pe reazem corespunzator cu noile aparate.

The bearing blocks shall be supplied before building the bearings and their seats. In case the height of the supplied bearing blocks differs from that given in the project, the heights on the seats shall be adjusted so as to comply with the new devices.

VEDERE A–A / A–A VIEW

Sc 1:100

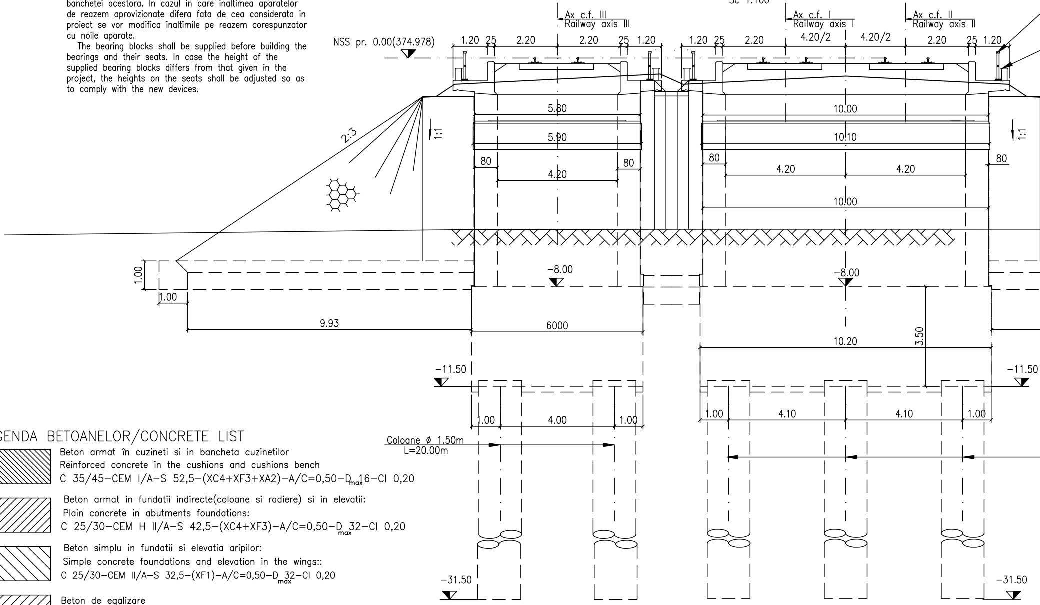
Ax c.f. III
Railway axis III
Ax c.f. I
Railway axis I
Ax c.f. II
Railway axis II
NSS pr. 0.00(374.978)
1.20
25
2.20
2.20
25
1.20
1.20
25
2.20
4.20/2
4.20/2
2.20
25
1.20
2:3
1:1
5.80
5.90
10.00
10.10
1:1
80
80
80
80
4.20
4.20
4.20
10.00
1.00
1.00
9.93
–8.00
–8.00
6000
10.20
3.50
–11.50
–11.50
1.00
4.00
1.00
1.00
4.10
4.10
1.00
Coloane ø 1.50m
L=20.00m
–31.50
–31.50

LEGENDA BETOANELOR/CONCRETE LIST

▧ Beton armat în cuzineti si in bancheta cuzinetilor
Reinforced concrete in the cushions and cushions bench
C 35/45–CEM I/A–S 52,5–(XC4+XF3+XA2)–A/C=0,50–D_{max}16–Cl 0,20

▨ Beton armat in fundatii indirecte(coloane si radiere) si in elevatii:
Plain concrete in abutments foundations:
C 25/30–CEM H II/A–S 42,5–(XC4+XF3)–A/C=0,50–D_{max}32–Cl 0,20

▧ Beton simplu in fundatii si elevatia aripilor:
Simple concrete foundations and elevation in the wings::
C 25/30–CEM II/A–S 32,5–(XF1)–A/C=0,50–D_{max}32–Cl 0,20

▨ Beton de egalizare
Concrete leveling
C 25/30–CEM II/A–S 32,5–(XF3)–A/C=0,55–D_{max}16–Cl 0,20

In cazul in care temperatura in timpul turnarii este scazuta, se vor folosi cimenturile cu rezistenta initiala mare, R si aditivi acceleratori, iar in cazul turnarii pe timp calduros, cimenturile cu rezistenta initiala uzuala, N si aditivi intarzietori (conf.NE 012/2–2010 si tabelului 2 din SR EN 197–1:2002).

When the temperature during the casting is low, cements with high initial resistance, R and accelerating additives shall be used and when it is cast during warm weather, cements with common initial resistance, N and delaying additives shall be used (according the norm NE 012/2–2010 and table 2 for the SR EN 197–1: 2002).

VEDERE IN PLAN / PLAN VIEW

Sc 1:100

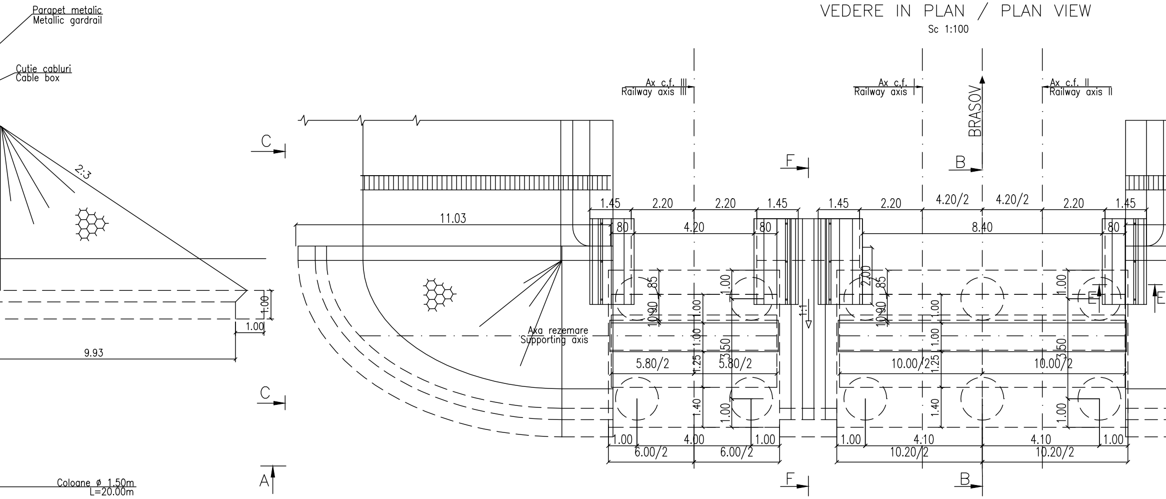
Parapet metalic
Metallic gardrail
Cutie cabluri
Cable box
2:3
Ax c.f. III
Railway axis III
Ax c.f. I
Railway axis I
Ax c.f. II
Railway axis II
BRASOV
C
F
B
A
E
11.03
1.45
2.20
4.20/2
.80
4.20
8.40
1.00
9.93
10.90
.85
2.00
3.50
1.25
1.40
5.80/2
10.00/2
4.00
4.10
6.00/2
10.20/2
1.1
Axa rezemare
Supporting axis
Coloane ø 1.50m
L=20.00m

N O T A

1. Prezentul plan s–a intocmit pe baza urmatoarelor date: –plan de situatie; –dispozitie generala; –profil in lung; –profil transversal; –fisa podului; –calcul hidraulic; –date culese pe teren.
2. Podul corespunde la convoaiele de calcul UIC (LM71 si SW/2).
3. Noul pod are urmatoarea alcatuire: – suprastructura: tablier metalic cu cuva din beton, pentru cale dubla;
– infrastructura: culei din beton armat, fundate indirect.
4. Cotele cuzinetilor si inaltimile pe reazem ale tablierelor se vor stabili numai dupa aprovizionarea ap. de reazem.
5. La executie se vor respecta cu strictete prevederile din "Normativ pentru producerea betonului si executarea lucrarilor din beton, beton armat si beton precomprimat. Partea 1: Producerea betonului", indicativ NE 012/1–2007 si "Normativ pentru producerea betonului si executarea lucrarilor din beton, beton armat si beton precomprimat. Partea 2: Executarea lucrarilor din beton", indicativ NE 012/2–2010, iar verificarea calitatii lucrarilor si receptionarea lor se va face conform normativului C56–1985.
–La proiect sunt atasate instructiunile pentru urmarirea curenta a comportarii in timp si Programul privind controlul calitatii lucrarilor.
6. Daca la executie se vor constata neconcordante intre situatia existenta pe teren si cea din proiect se va anunta proiectantul.
7. Constructia se incadreaza in categoria de importanta B (constructii de importanta deosebita), modelul 1 de asigurare a calitatii si clasa de importanta B, conform HG 766/1997.
8. Proiectul va fi verificat la exigentele A4.2; B2.2; D2.2

N O T E

1. This plan has been drawn up based on the following data
–Longitudinal Profile; –Cross–section Profile; –Bridge's File; –
2. Bridge convoys calculation corresponds to UIC (LM71 and
3. The new bridge has the following structure: – Superstruct
double track;
– Infrastructure: abutments and reinforced concrete, with ind
4. Shares bearing bushings and height on the decks will be
support equipment
5. The execution will strictly comply with the provisions of
and works execution, reinforced and pre–stressed concrete –
production" NE 012/1–2007 and "Practice code for the conc
reinforced and pre–stressed concrete – Part 2: The executio
and the quality and the reception of the works shall be mad
6. In case during the execution there will be found out any
on site and in project, the designer will be anounced.
7. The construction has been classified in B category of im
model 1 –ensuring the quality and class of importance B ac
8. The project will be checked to comply with the requiremen

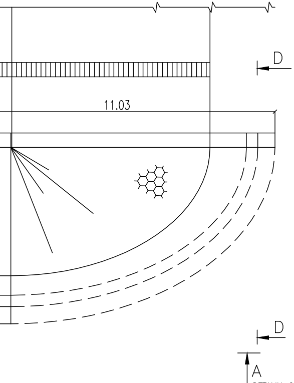

: −Lay−out Plan; −the general disposition;
−Hydraulic determination; −Field Data.
SW/2).
ure: metallic deck with concrete box for

irectly foundation.
established only after the supply of

"Practice code for the concrete production
Part 1: Practice code for concrete
crete production and works execution,
n of concrete works." NE 012/2−2010,
le accordingly to Norm C 56−1985.
discrepancies between the existing situation

portance (high important constructions),
cording to G.O. 766/97.
nts A4.2; B2.2; D2.2.

SECTIUNE B−B / SECTION B−B

Sc 1:100

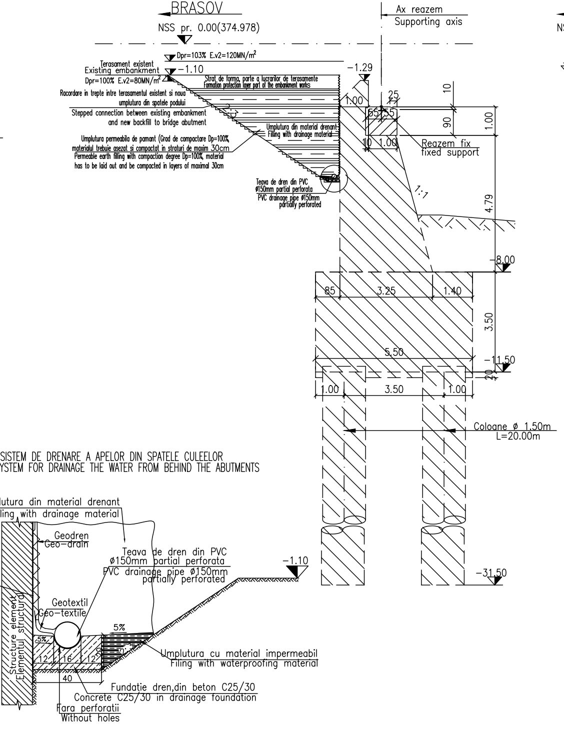
BRASOV
NSS pr. 0.00(374.978)
Ax reazem
Supporting axis
Dpr=103% E.v2=120MN/m²
Terasament existent
Existing embankment
−1.10
Dpr=100% E.v2=80MN/m²
Strat de forma, parte a lucrarilor de terasamente
Formation protection layer part of the embankment works
Racordare in trepte intre terasamentul existent si noua umplutura din spatele podului
Stepped connection between existing embankment and new backfill to bridge abutment
Umplutura din material drenant
Filling with drainage material
Umplutura permeabila de pamant (Grad de compactare Dp=100%, materialul trebuie asezat si compactat in straturi de maxim 30cm
Permeable earth filling with compaction degree Dp=100%, material has to be laid out and be compacted in layers of maximal 30cm
Teava de dren din PVC ø150mm partial perforata
PVC drainage pipe ø150mm partially perforated
−1.29
1.00
25
55
55
10
90
1.00
10
1.00
Reazem fix
fixed support
1:1
4.79
−8.00
85
3.25
1.40
3.50
5.50
−11.50
20
1.00
3.50
1.00
Coloane ø 1.50m
L=20.00m
−31.50

DETALIU−SISTEM DE DRENARE A APELOR DIN SPATELE CULEELOR
DETAIL−SYSTEM FOR DRAINAGE THE WATER FROM BEHIND THE ABUTMENTS

Umplutura din material drenant
Filling with drainage material
Geodren
Geo−drain
Teava de dren din PVC ø150mm partial perforata
PVC drainage pipe ø150mm partially perforated
−1.10
Structure element
Elementul structural
Geotextil
Geo−textile
5%
5%
12
16
12
40
Umplutura cu material impermeabil
Filing with waterproofing material
Fundatie dren,din beton C25/30
Concrete C25/30 in drainage foundation
Fara perforatii
Without holes

SECT

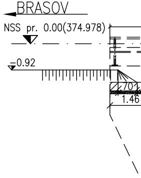
BRASOV
NSS pr. 0.00(374.978)
−0.92
70
1.46

TIUNE F–F/F–F SECTION
Sc 1:100

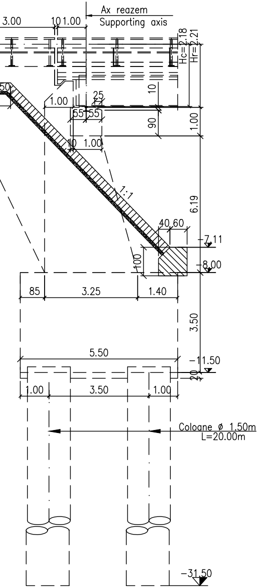
Ax reazem
Supporting axis
3.00
10
1.00
Hc=2.18
Hr=2.21
50
1.00
25
65
55
10
90
1.00
10
1.00
1:1
6.19
40
60
−7.11
100
−8.00
85
3.25
1.40
3.50
5.50
−11.50
20
1.00
3.50
1.00
Coloane ø 1.50m
L=20.00m
−31.50

VEDERE C–C/C–C VIEW
Sc 1:100

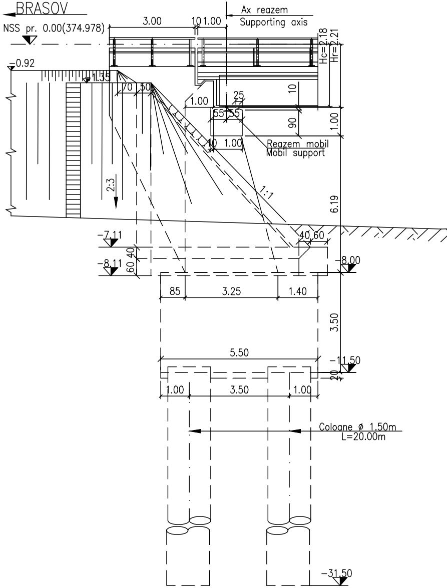
BRASOV
Ax reazem
Supporting axis
NSS pr. 0.00(374.978)
3.00
10
1.00
Hc=2.18
Hr=2.21
−0.92
1.35
70
50
1.00
25
10
65
55
90
1.00
10
1.00
Reazem mobil
Mobil support
2:3
1:1
6.19
−7.11
40
60
60
40
−8.11
−8.00
85
3.25
1.40
3.50
5.50
−11.50
20
1.00
3.50
1.00
Coloane ø 1.50m
L=20.00m
−31.50

VEDERE D–D/D–D VIEW
Sc 1:100

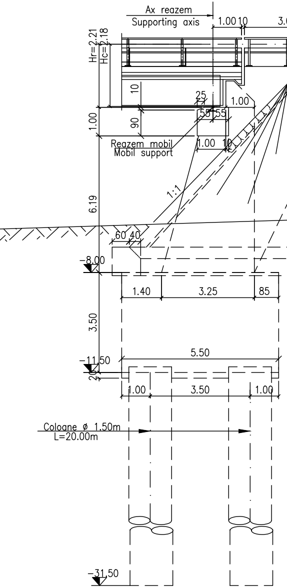
Ax reazem
Supporting axis
BRASOV
1.00
10
3.00
NSS pr. 0.00(374.978)
Hr=2.21
Hc=2.18
−0.92
1.35
50
70
10
25
1.00
1.00
90
55
55
Reazem mobil
Mobil support
1.00
10
1:1
2:3
6.19
60
40
−7.11
−8.00
60
40
−8.11
1.40
3.25
85
3.50
5.50
−11.50
20
1.00
3.50
1.00
Coloane ø 1.50m
L=20.00m
−31.50

DETALIU "A" DE
"A" DETAIL

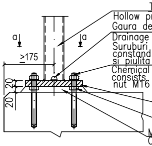
Hollow pr
Gaura de
Drainage
Suruburi
constand
si piulita
Chemical
consists
nut M16
a
a
≥175
20
20
20
M
C

SECTIUNE a–a/a–a SE

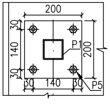
200
30
140
30
P1
200
30
140
30
P5

SECTIUNE E–E/
SECTION E–E
Sc 1:100

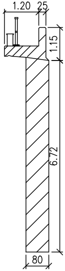
1.20
25
1.15
6.72
80

MASURATOAREA MATERIALULUI METALIC NECESAR PENTRU PARAPETUL LA CULEEA BRASOV
MEASUREMENT FOR THE METALLIC MATERIAL REQUIRED FOR THE FOOT PATH FOR BRASOV ABUTMENT

Poz. 0	Denumire	Dimensiuni	Nr. buc. asemenea	Greutate S235		
				kg/ml	kg/buc.	Total(kg)
	1	2	3	4	5	6
P1	Teava patrata Hollow profile	70x70x4–910	4	8.29	7.54	30.16
P2	Teava dreptunghiulara Hollow profile	90x50x3.2–2000	1	6.71	13.45	13.45
P3	Teava dreptunghiulara Hollow profile	60x40x4–1600	1	5.78	9.30	9.30
P4	Teava dreptunghiulara Hollow profile	60x40x4–150	4	5.78	1.00	4.00
P5	Placa de baza Plate	200x20–200	4	31.40	6.28	25.12
	Suruburi M16 Bolts M16	ø16–130	24	–	0.231	5.55
	Piulite M16 Nuts M16	–	48	–	0.031	1.50
	Saibe Washers	–	24	–	0.011	0.30
	Total partial					89.40
	Spor 3% pt. sudura					3.00
	TOTAL (kg)					100.00

PRINDERE A PARAPETULUI
HANDRAIL FASTENING

eava patrata
rofile
drenare
opening
chimice (aprobate pentru betoane fisurate)
in armaturi prevazute cu filet M16, saiba
M16 din otel inoxidabil
bolts (approved for cracked concrete)
out of thread bar M16, washer and
stainless steel
Placa de baza 200x20–200
Baseplate 200x20–200
Piulita de ajustare
Adjusting nut
Mortar de ciment– sau mortar epoxidic
ement – or Epoxymortar

CTION

DETALIU TROTUAR/SIDEWALK
Sc 1:20

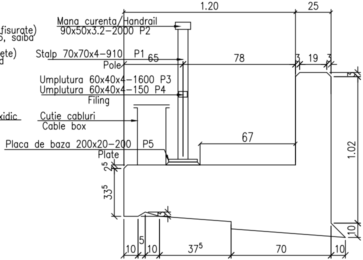
1.20
25
Mana curenta/Handrail
90x50x3.2–2000 P2
Stalp 70x70x4–910 P1
Pole
65
78
3
19
3
3
Umplutura 60x40x4–1600 P3
Umplutura 60x40x4–150 P4
Filing
Cutie cabluri
Cable box
Placa de baza 200x20–200 P5
Plate
67
1.02
2⁵
33⁵
3
10
5
10
37⁵
70
10
10

This drawing is forbidden to be copied, lent or used in other purposes than those previously approved by AREX *Lider* Company as its owner.
Se interzice copierea, difuzarea, imprumutarea sau utilizarea in alte scopuri, fara permisiunea AREX *Lider* Company ca proprietar al desenului.

Indice Index	Data Date	Modificare Modification/Revision	Proiectant Designer	Aprobat Consultant Approved Consultant	Aprobat CFR Approved CFR
D					
C					
B					
A	12.2011	Revizia 1 1 Revision	Maria Campan		

GUVERNUL ROMANIEI
ROMANIAN GOVERNMENT

PROIECT FINANȚAT DE UNIUNEA EUROPEANĂ
EUROPEAN UNION FINANCED PROJECT

CLIENT / CLIENT

C.N.C.F. "C.F.R." - S.A.

ITALFERR
GRUPPO FERROVIE DELLO STATO
Joint Venture leader

Scott Wilson

OBERMEYER
PLANEN + BERATEN GmbH

TECNIC
Consulting Engineers

CONSULTANT / CONSULTANT

			Data Date	Semnătură Signature
Aprobat Approved	Şef proiect Project manager	R. Liuzza		
Aprobat Approved	Coordonator Secţiune 1 Section 1 Coordinator	C. Gambelli		
Verificat Checked	Expert Cheie Checking Expert	V.Kallidromitis		

SUBCONTRACTANT / SUBCONTRACTOR

AREX Lider COMPANY

Aprobat Approved	Responsabil Subconsultant Subconsultant Responsible	A. Dinulescu Stanciu	11.2011	
Întocmit Elaborated	Proiectant Designer	Secu Andrei Razvan	11.2011	

Reabilitarea liniei de cale ferata Braşov - Simeria, parte componentă a coridorului IV Pan European, pentru circulaţia trenurilor cu viteza maximă de 160 km/h,
Tronsonul : Braşov - Sighişoara
Rehabilitation of the railway line Braşov - Simeria, component Part of the IV Pan-European Corridor, for the trains circulation with maximum speed of 160 km/h,
Section : Braşov - Sighişoara

Proiect/Project
2004/RO/16/P/PA/003

Faza / Phase:
P.Th. / T.D.

Denumire desen / Drawing Title :

INTERVAL / SECTION ACATA - VANATORI

POD / BRIDGE Km 270+262.472 D=18.00m+45.00m+18.00m

PLAN COFRAJ CULEEA BRASOV/ FORMWORK PLANE (BRASOV ABUTMENT)

Codificare / Codification System	Scara / Scale	LOT / LOT	Nr. / No
	1:100 1:20		01 / 01

E A 5 1 | 0 1 | E | 1 6 | B B | P V | 0 4 | 2 | 2 | 0 0 3 | 1