SECTIUNE TRANSVERSALA TABLIER POD
BRIDGE DECK CROSS SECTION

sc. 1:20

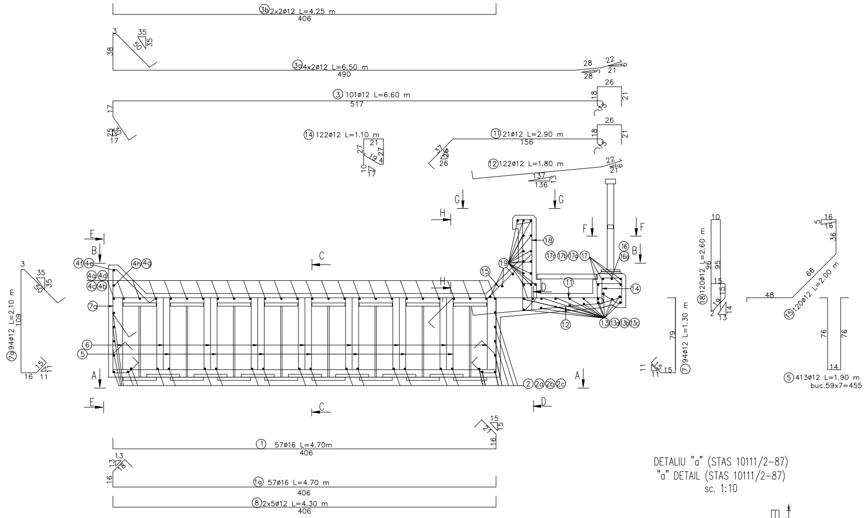

③b 2x2ø12 L=4.25 m
406
③a 4x2ø12 L=6.50 m
490
③ 101ø12 L=6.60 m
517
⑭ 122ø12 L=1.10 m
⑪ 21ø12 L=2.90 m
156
⑫ 122ø12 L=1.80 m
137
136
⑦a 94ø12 L=2.10 m
109
⑱ 120ø12 L=2.60 m
⑦ 94ø12 L=1.30 m
79
⑮ 120ø12 L=2.00 m
⑤ 413ø12 L=1.90 m
buc.59x7=455
① 57ø16 L=4.70m
406
①a 57ø16 L=4.70 m
406
⑧ 2x5ø12 L=4.30 m
406
④f ④e ④h ④g ④a ④d ④c ④b ⑦a ⑥ ⑤
②②a②b②c
⑬⑬a⑬b⑬c
⑰a ⑰b ⑰a ⑰
⑯ ⑯a
⑲ ⑮ ⑱ ⑪ ⑭ ⑫
A B C D E F G H

DETALIU "a" (STAS 10111/2-87)
"a" DETAIL (STAS 10111/2-87)

sc. 1:10

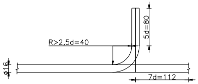

R>2,5d=40
5d=80
ø16
7d=112

Beton: Concrete:	– C30/37 suprastructura/superstructure
Tipul grinzilor: Beams type:	– grinzi metalice sudate/steel welded girders
Otel pentru grinzi: Steel for the beams:	– (OL 37-EP) $S275J_3G_3$ (EN 10025/2004)
Armatura: Reinforcement:	– S355;S345
Strat de acoperire: Concrete cover	– min. 4cm expunere in aer/air exposed

SECTIUNE B-B
B-B SECTION

sc. 1:50

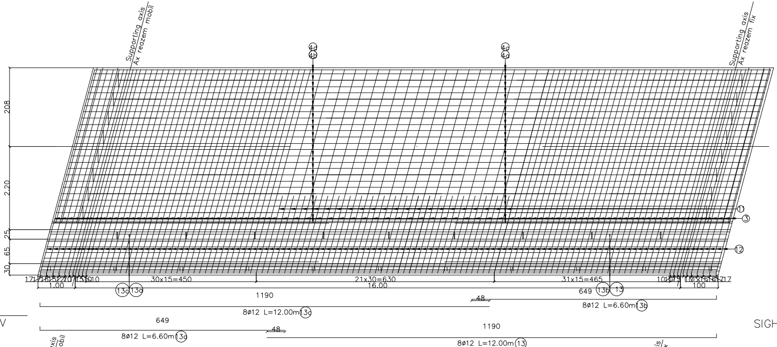
Supporting axis
Ax reazem mobil
Supporting axis
Ax reazem fix
4c
4b
4c
4d
208
2.20
25
65
30
11
3
12
17 17 16 15 27 10 15 10 10
1.00
30x15=450
21x30=630
16.00
31x15=465
10 10 7 5 10 12 15 16 17 17
100
13c
13a
13b
13
1190
649
48
8ø12 L=12.00m 13c
8ø12 L=6.60m 13b
649
48
1190
8ø12 L=6.60m 13a
8ø12 L=12.00m 13

BRASOV

SIGHISOARA

SECTIUNE A-A
A-A SECTION

sc. 1:50

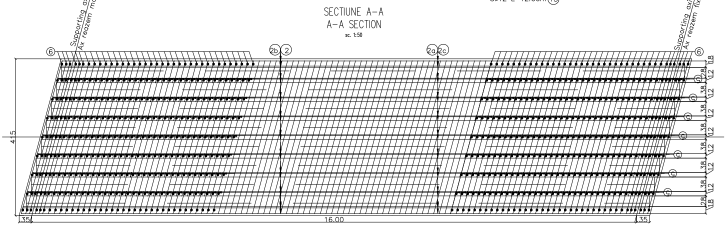
Supporting axis
Ax reazem mobil
Supporting axis
Ax reazem fix
6
2b
2
2a
2c
6
415
5
18
28
12
38
12
38
12
38
12
38
12
38
12
38
12
28
18
35
16.00
35

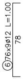
6 76x9ø12 L=1.00
78

SECTIUNE C-C/C-C SECTION

sc. 1:20

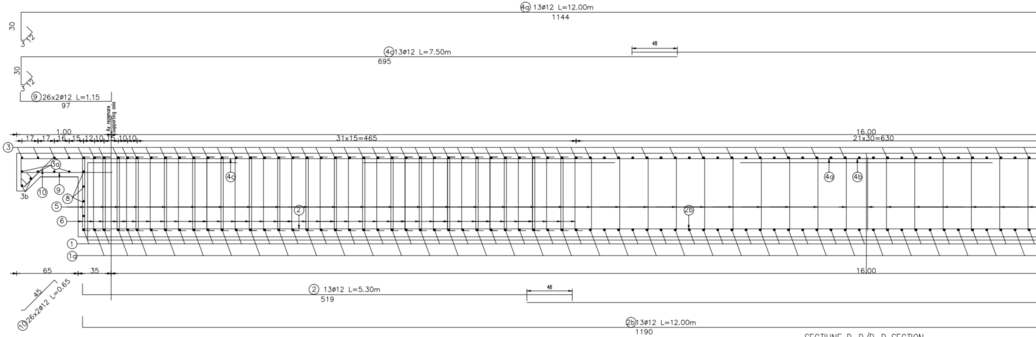
4a 13ø12 L=12.00m
1144
30
3
12
4c 13ø12 L=7.50m
695
48
30
3
12
9 26x2ø12 L=1.15
97
Ax rezemare
Supporting axis
1.00
17
17
16
15
12
10
10
10
31x15=465
16.00
21x30=630
3
3a
3b
10
9
8
5
6
4c
2
2b
4a
4b
1
1a
65
35
16.00
45
10 26x2ø12 L=0.65
2 13ø12 L=5.30m
519
48
2b 13ø12 L=12.00m
1190

SECTIUNE D-D/D-D SECTION

sc. 1:20

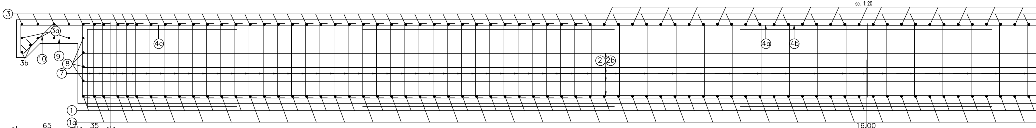
3
3a
3b
10
9
8
7
4c
2
2b
4a
4b
1
1a
65
35
16.00

SECTIUNE E-E/E-E SECTION

sc. 1:20

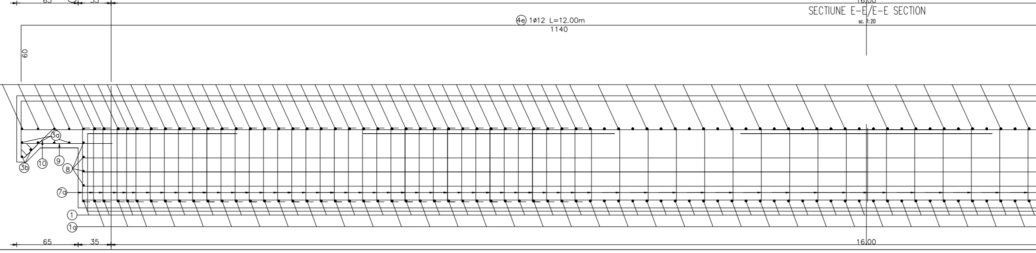
4e 1ø12 L=12.00m
1140
60
3a
3b
10
9
8
7a
1
1a
65
35
16.00

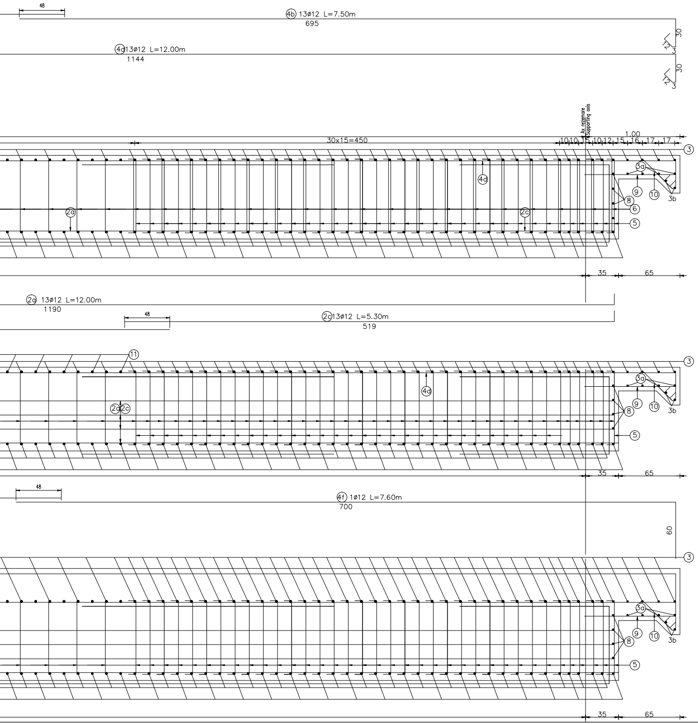
48
4b 13ø12 L=7.50m
695
30
12
3
4a 13ø12 L=12.00m
1144
30
12
3
Ax rezemare
Supporting axis
1.00
30x15=450
10 10 15 10 12 15 16 17 17
3
3a
4a
9
10
3b
8
6
2a
2c
5
35
65
2a 13ø12 L=12.00m
1190
48
2c 13ø12 L=5.30m
519
11
3
3a
4d
9
10
3b
8
2a 2c
5
35
65
48
4f 1ø12 L=7.60m
700
60
3
3a
9
10
3b
8
5
35
65

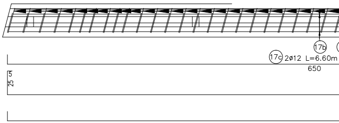
17b
17c 2ø12 L=6.60m
650
25 5

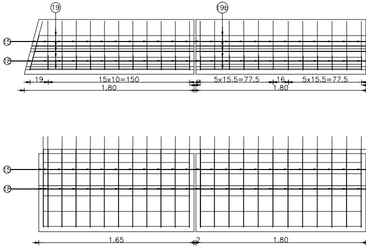
19
19b
15
18
19
15x10=150
1.80
2
5x15.5=77.5
16
5x15.5=77.5
1.80
15
18
1.65
2
1.80

VEDERE F-F/VIEW F-F

sc. 1:20

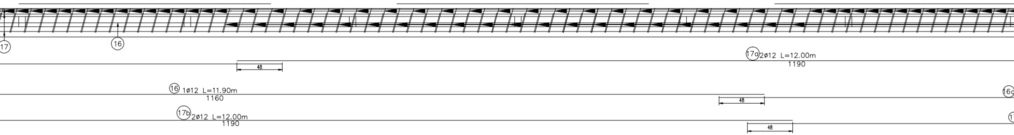
17
16
17a 2ø12 L=12.00m
1190
48
16 1ø12 L=11.90m
1160
48
16a
17b 2ø12 L=12.00m
1190
48

VEDERE G-G/VIEW G-G

sc. 1:20

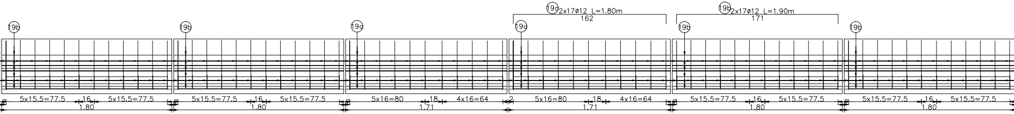
19a 2x17ø12 L=1.80m
162
19b 2x17ø12 L=1.90m
171
19b
19b
19a
19a
19b
19b
5x15.5=77.5
16
5x15.5=77.5
1.80
5x15.5=77.5
16
5x15.5=77.5
1.80
5x16=80
18
4x16=64
1.71
2
5x16=80
18
4x16=64
1.71
5x15.5=77.5
16
5x15.5=77.5
1.80
5x15.5=77.5
16
5x15.5=77.5
1.80

VEDERE H-H/VIEW H-H

sc. 1:20

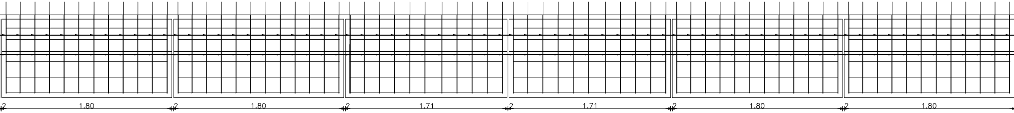
2
1.80
2
1.80
2
1.71
2
1.71
2
1.80
2
1.80

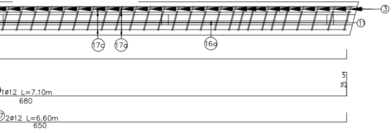
3
11
17c
17a
16a
1ø12 L=7.10m
680
25
5
2ø12 L=6.60m
650

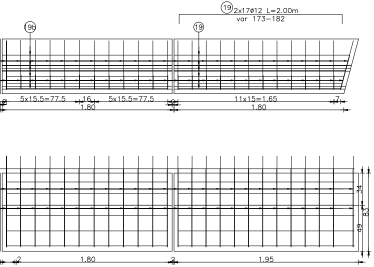
19
2x17ø12 L=2.00m
var 173–182
19b
19
5x15.5=77.5
16
5x15.5=77.5
1.80
11x15=1.65
7
1.80
34
83
49
2
1.80
2
1.95

NOTA/NOTE

Pentru mentinerea pozitiei corecte in timpul betonarii, se vor monta distantieri minim 4buc./m^2. Distantierii trebuie legati cu sarma de carcasa de armatura.

In order to maintain the correct position during concreting, minimum 4pcs./m^2 distance pieces shall be mounted. The distance pieces shall be connected to the reinforcing framework, using wire.

EXTRAS DE ARMATURA TABLIER

Marca	Diametru	Lung./buc.[m]	Nr.buc.	S355	S345
				%%C12	%%C16
1	16	4.70	57		267.90
1a	16	4.70	57		267.90
2	12	5.30	13	68.90	
2a	12	12.00	13	156.00	
2b	12	12.00	13	156.00	
2c	12	5.30	13	68.90	
3	12	6.60	101	666.60	
3a	12	6.50	8	52.00	
3b	12	4.25	2	8.50	
4a	12	12.00	13	156.00	
4b	12	7.50	13	97.50	
4c	12	7.50	13	97.50	
4d	12	12.00	13	156.00	
4e	12	12.00	1	12.00	
4f	12	7.60	1	7.60	
5	12	1.90	413	784.70	
6	12	1.00	684	684.00	
7	12	1.30	94	122.20	
7a	12	2.10	94	197.40	
8	12	4.30	10	43.00	
9	12	1.15	52	59.80	
10	12	0.65	52	33.80	
11	12	2.90	21	60.90	
12	12	1.80	122	219.60	
13	12	12.00	8	96.00	
13a	12	6.60	8	52.80	
13b	12	6.60	8	52.80	
13c	12	12.00	8	96.00	
14	12	1.10	122	134.20	
15	12	2.00	120	240.00	
16	12	11.90	1	11.90	
16a	12	7.10	1	7.10	
17	12	6.60	2	13.20	
17a	12	12.00	2	24.00	
17b	12	12.00	2	24.00	
17c	12	6.60	2	13.20	
18	12	2.60	120	312.00	
19	12	2.00	34	68.00	
19b	12	1.90	102	193.80	
19a	12	1.80	34	61.20	
Lungimi totale pe diametre			(m)	5309.10	535.80
Masa pe metru liniar			(kg/ml)	0.888	1.578
Masa pe diametre			(kg)	4713.50	845.70
Masa pe tip otel			(kg)	4715.00	850.00
Masa totala tablier			(kg)	5565.00	

Se interzice copierea, difuzarea, imprumutarea sau utilizarea in alte scopuri, fara permisiunea AREX Lider Company ca proprietar al desenului. This drawing is forbidden to be copied, lent or used in other purposes than those previously approved by AREX Lider Company as its owner.

Indice Index	Data Date	Modificare Modification/Revision	Proiectant Designer	Aprobat Consultant Approved Consultant	Aprobat CFR Approved CFR
D					
C					
B					
A					

GUVERNUL ROMANIEI
ROMANIAN GOVERNMENT

PROIECT FINANŢAT DE UNIUNEA EUROPEANĂ
EUROPEAN UNION FINANCED PROJECT

CLIENT / CLIENT

C.N.C.F. "C.F.R." - S.A.

ITALFERR
GRUPPO FERROVIE DELLO STATO
Joint Venture leader

Scott Wilson

OBERMEYER
PLANEN + BERATEN GmbH

TECNIC
Consulting Engineers

CONSULTANT / CONSULTANT

			Data Date	Semnătură Signature
Aprobat Approved	Şef proiect Project manager	R. Liuzza		
Aprobat Approved	Coordonator Secţiune 1 Section 1 Coordinator	C. Gambelli		
Verificat Checked	Expert Cheie Checking Expert	V. Kallidromitis		VK

SUBCONTRACTANT / SUBCONTRACTOR

AREX Lider COMPANY

Aprobat Approved	Responsabil Subconsultant Subconsultant Responsible	A.Stanciu - Dinulescu	02.2012	
Întocmit Elaborated	Proiectant Designer	Secu Andrei Razvan	02.2012	

Reabilitarea liniei de cale ferata Braşov - Simeria, parte componentă a coridorului IV Pan European, pentru circulaţia trenurilor cu viteza maximă de 160 km/h,
Tronsonul : Braşov - Sighişoara
Rehabilitation of the railway line Braşov - Simeria, component Part of the IV Pan-European Corridor, for the trains circulation with maximum speed of 160 km/h,
Section : Braşov - Sighişoara

Proiect/Project
2004/RO/16/P/PA/003

Faza / Phase:
D.E. / E.D.

Denumire desen / Drawing Title :
INTERVAL/SECTION ARCHITA–VANATORI
POD Km270+362.572 L=16.00m/ARMARE SUPRASTRUCTURA TABLIER 1
BRIDGE Km270+362.572 L=16.00m/SUPERSTRUCTURE REINFORCEMENT DECK 1

Codificare / Codification System	Scara / Scale 1:20 / 1:50	LOT / LOT	Nr. / No 01 / 01

E A 5 1 | 0 1 | E | 1 6 | B C | P V | 0 4 | 3 | 3 | 0 1 2 | 0