ELEVATIE A-A / A-A ELEVATION
Sc 1:100

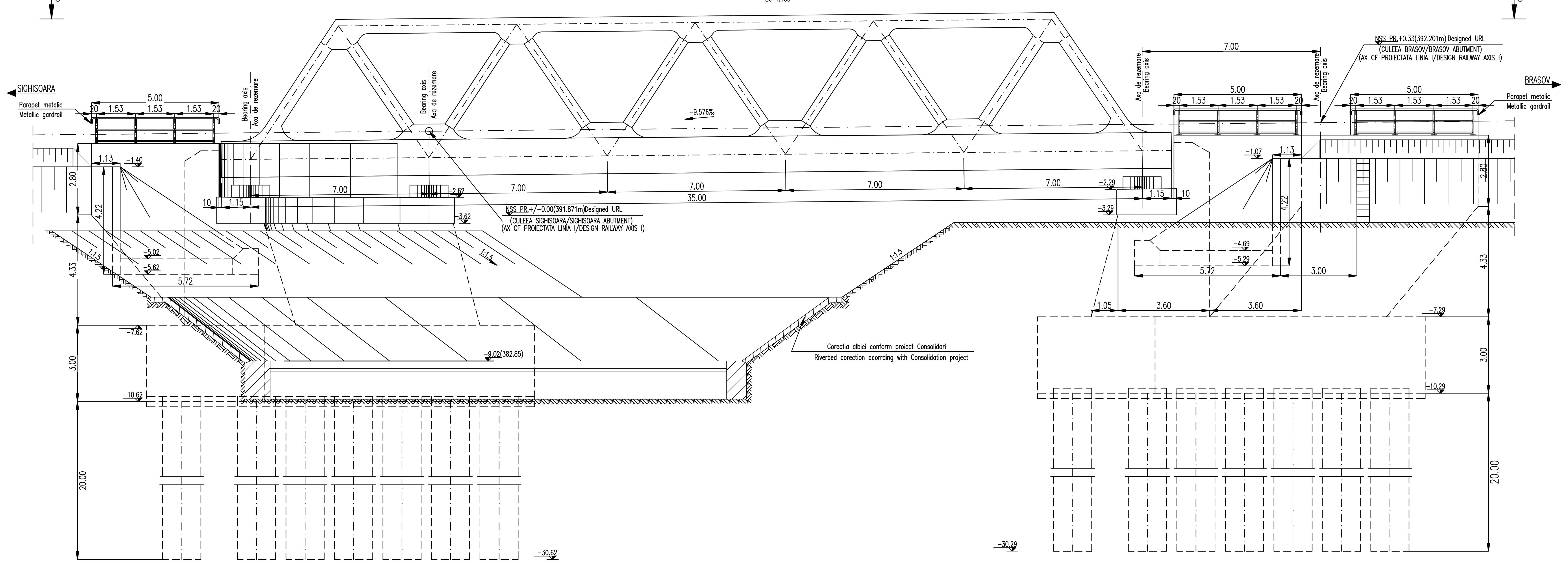

ELEVATIE B-B / B-B ELEVATION
Sc 1:100

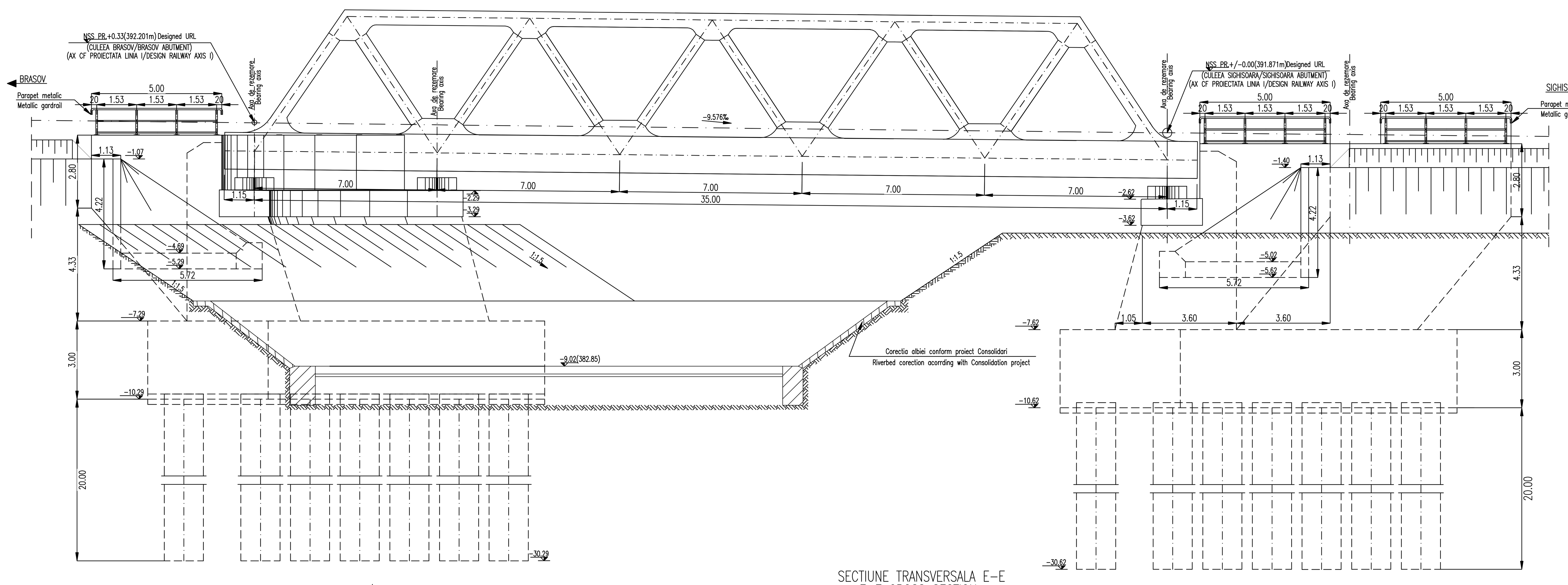

VEDERE IN PLAN C-C/PLAN VIEW C-C
Sc 1:100

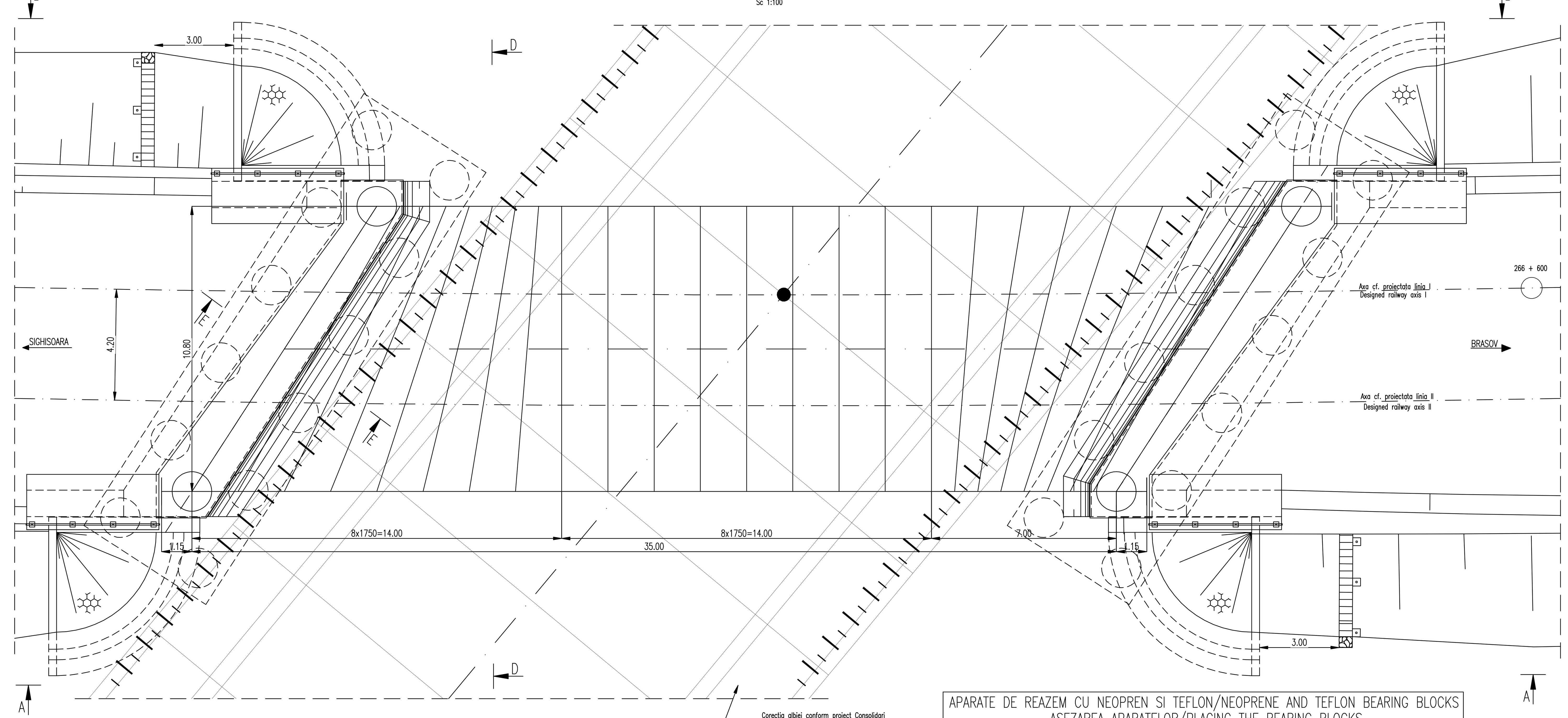

VEDERE D-D/D-D VIEW
Sc 1:100

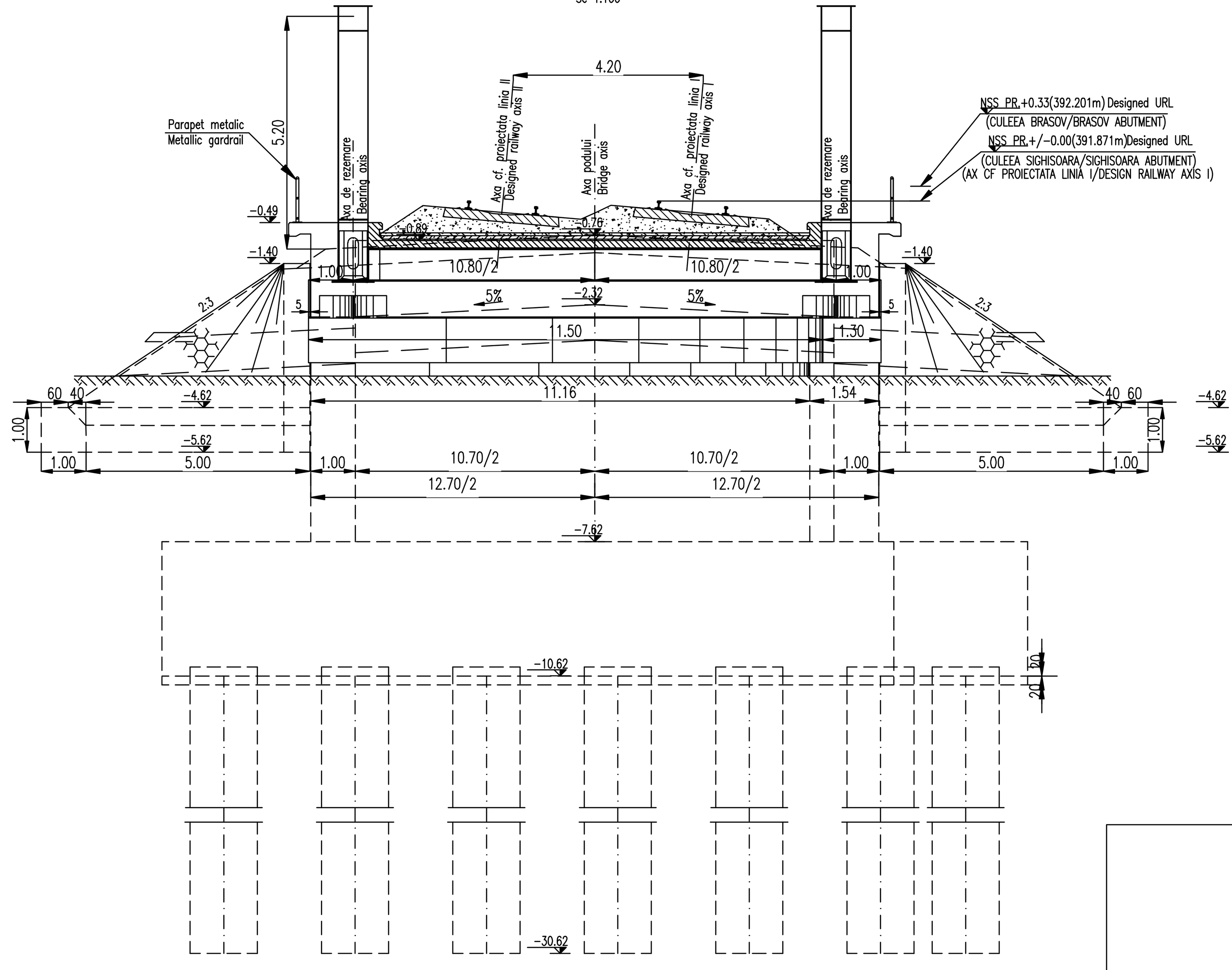

SECTIUNE TRANSVERSALA E-E
E-E CROSS SECTION
Sc 1:100

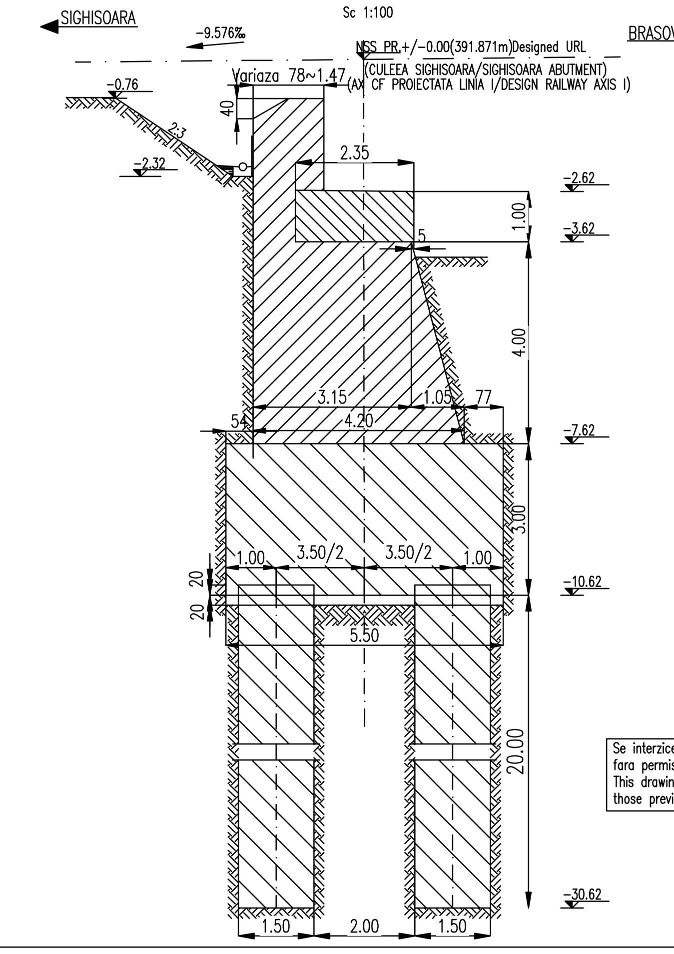

LEGENDA BETOANELOR/CONCRETE LIST

- Beton armat în bancheta cuzinetilor
  Reinforced concrete in the cushions and cushions bench
  C 35/45-CEM I/A-S 52,5-(XC4+XF3+XA2)-A/C=0,50-D 16-Cl 0,20
- Beton armat în elevatie si in zidurile intoarse
  Reinforced concrete in the elevation infrastructure and reverted walls
  C 25/30-Ciment H II/A-S 42,5-(XC4+XF3)-A/C=0,50-D 32-Cl 0,20
- Beton simplu in fundatii:
  Plain concrete in abutments foundations:
  C 25/30-Ciment H II/A-S 42,5-(XF3)-A/C=0,50-D 32-Cl 0,20
- Beton in stratul de protectie al hidroizolatiei
  Concrete in the protection layer of the waterproofing
  C 25/30-Ciment II/A-S 32,5-(XC4+XF3)-A/C=0,50-D 16-Cl 0,20

N O T A

Lungimea fisei coloanelor se va stabili in urma forarii „in situ" cu identificarea fisei litologice, si in urma incercarilor la rupere a coloanelor de proba executate in afara amplasamentului.
Numarul coloanelor de proba a fost stabilit conform prevederilor din EUROCOD.
Capacitatea portanta a coloanelor se va stabili conform prevederilor din EUROCOD, sectiunea Geotehnica, cu coeficienti pentru incercari „in situ".
Toate coloanele se vor verifica US.

N O T E

The length of the columns will be established based on the "in situ" drilling, identifying the lithological configuration of the soil (Lithological Sheet), after the breakdown tests made on the testing columns built outside the final location.
The number of the testing columns was established complying with the provisions in EURO CODE.
The columns bearing capacity shall be established complying with the provisions in EURO CODE, Geotechnical section, using the "in situ" testing coefficients.
All columns shall be checked US.

Se interzice copierea, difuzarea, imprumutarea sau utilizarea in alte scopuri, fara permisiunea AREX LIDER COMPANY ca proprietar al desenului.
This drawing is forbidden to be copied, lent or used in other purposes than those previously approved by AREX LIDER COMPANY as its owner.

SCHEMA GEOMETRICA A TABLIERULUI/GENERAL SCHEME
Sc 1:200

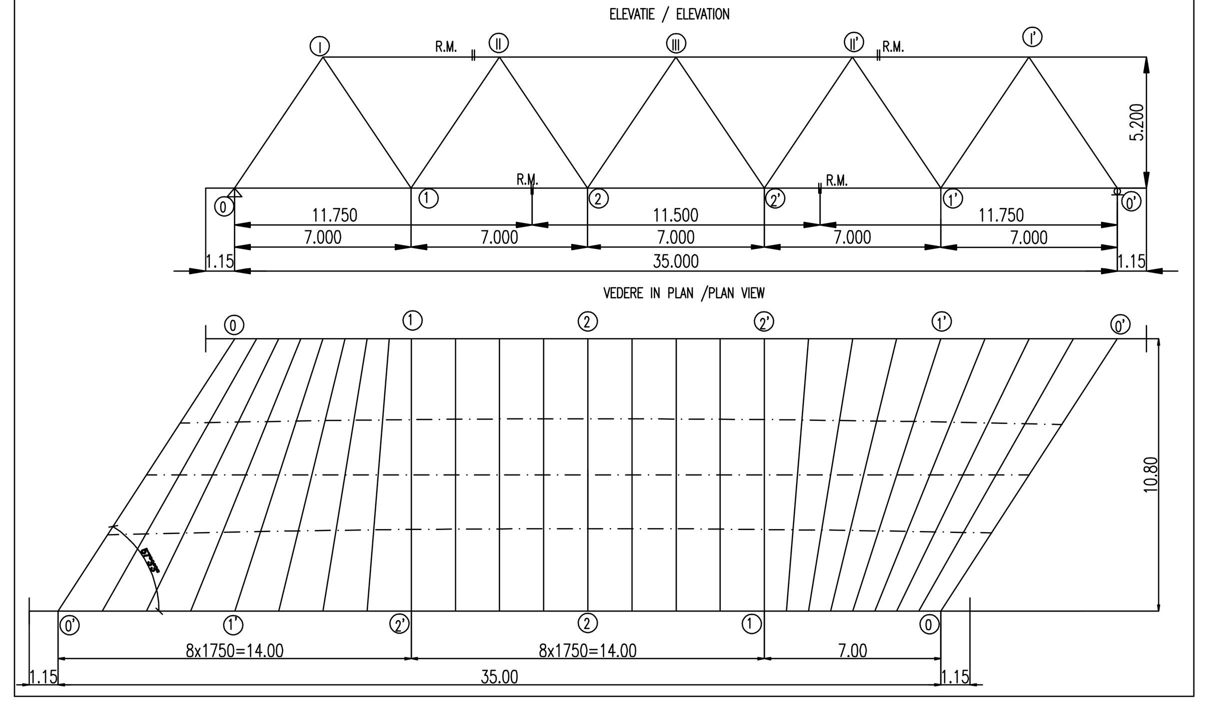

APARATE DE REAZEM CU NEOPREN SI TEFLON/NEOPRENE AND TEFLON BEARING BLOCKS
ASEZAREA APARATELOR/PLACING THE BEARING BLOCKS

1. APARAT DE REAZEM FIX
2. APARAT DE REAZEM GLISANT GHIDAT
3. APARAT DE REAZEM LIBER
4. APARAT DE REAZEM GLISANT GHIDAT

1. FIXED BEARING BLOCK
2. GUIDED SLIDING BEARING BLOCK
3. FREE BEARING BLOCK
4. GUIDED SILIDING BEARING BLOCK

NOTA:

1. Prezentul plan s-a intocmit pe baza urmatoarelor date:
-plan de situatie
-profil in lung
-profil transversal
2. Podetul corespunde la convoaiele de calcul UIC (LM71 si SW/2)
3. Noul pod are urmatoarea alcatuire:
 - suprastructura: tablie din grinzi cu zabrele cuva de beton, cale dubla;
 - infrastructura: culei din beton armat, fundate direct.
4. La executie se vor respecta cu strictete prevederile din "Normativ pentru producerea betonului si executarea lucrarilor din beton, beton armat si beton precomprimat. Partea 1: Producerea betonului", indicativ NE 012/1-2007 si "Normativ pentru producerea betonului si executarea lucrarilor din beton, beton armat si beton precomprimat. Partea 2: Executarea lucrarilor din beton", indicativ NE 012/2-2010, iar verificarea calitatii lucrarilor si receptionarea lor se va face conform normativului C56-1985.
5. Daca la executie se vor constata neconcordante intre situatia existenta pe teren si cea din proiect se va anunta proiectantul;
6. Constructia se incadreaza in categoria de importanta B (constructii de importanta deosebita), modelul 1 de asigurare a calitatii si clasa de importanta B, conform HG 766/1997.
7. Proiectul va fi verificat la exigentele A4.2; B2.2; D2.2.

NOTE:

1. This plan has been drawn up based on the following data:
-Lay-out Plan
-Longitudinal Profile
-Cross-section Profile
2. The culvert corresponds to the UIC determination convoys (LM71 and SW/2)
3. The new bridge has the following structure:
- Superstructure: deck made from metallic beams;
- Infrastructure: abutments and reinforced concrete, with direct foundation.
4. The execution will strictly comply with the provisions of "Practice code for the concrete production and works execution, reinforced and pre-stressed concrete - Part 1: Practice code for concrete production" NE 012/1-2007 and "Practice code for the concrete production and works execution, reinforced and pre-stressed concrete - Part 2: The execution of concrete works." NE 012/2-2010, and the quality and the reception of the works shall be made accordingly to Norm C 56-1985.
5. In case during the execution there will be found out any discrepancies between the existing situation on site and in project, the designer will be anounced.
6. The construction has been classified in B category of importance (high important constructions), model 1-ensuring the quality and class of importance B according to G.O. 766/97.
7. The project will be checked in order to comply with the A4.2; B2.2; D2.2 requirements.

TITLUL PLANŞEI /PLAN TITLE		COD/CODE																				
		a				b		c	d		e		f		h		j	g	i			k
PLANURI TIP LA PODURI																						
DETAILS FOR BEARING BLOCK MADE OF TEFLON AND NEOPRENE	DETALII APARAT DE REAZEM DIN TEFLON SI NEOPREN	E	A	5	1	0	1	E	0	0	B	K	P	V	0	0	0	0	0	0	2	0
DETAILS FOR WATERPROOFING AND JOINT COVERING	DETALII HIDROIZOLATII SI ROSTURI	E	A	5	1	0	1	E	0	0	Q	K	P	V	0	0	0	0	0	0	3	0
DETAILS FOR DISCHARGE OPENINGS	DETALII GURI DE SCURGERE	E	A	5	1	0	1	E	0	0	Q	K	P	V	0	0	0	0	0	0	4	0
DETAILS FOR PARAPETS ON THE DECKS	DETALII PARAPET PE TABLIER	E	A	5	1	0	1	E	0	0	B	C	P	V	0	0	0	0	0	1	9	0
FASTENING DETAILS FOR ELECTRIFICATION POLES	DETALII PRINDERE STALPI DE ELECTRIFICARE	E	A	5	1	0	1	E	0	0	B	C	P	V	0	0	0	0	0	0	6	0
STRUCTURAL FORMWORKS OF STEEL BEAM FOR TRUSS BEAM DECK WITH L= 35 m and W= 10,80 m	PLAN GENERAL GRINDA METALICA PENTRU TABLIER GRINDA ZABRELE, L= 35 m SI W = 10,80 m	E	A	5	1	0	1	E	0	0	B	C	P	V	0	0	0	0	0	0	8	0

Indice / Index	Data / Date	Modificare / Modification/Revision	Proiectant / Designer	Aprobat Consultant / Approved Consultant	Aprobat CFR / Approved CFR
D					
C					
B					
A	12.2011	Revizia 1 / 1 Revision	Olar Mihai Adrian		

GUVERNUL ROMANIEI / ROMANIAN GOVERNMENT

PROIECT FINANŢAT DE UNIUNEA EUROPEANĂ / EUROPEAN UNION FINANCED PROJECT

CLIENT / CLIENT — C.N.C.F. "C.F.R." - S.A.

ITALFERR GRUPPO FERROVIE DELLO STATO *Joint Venture leader* — Scott Wilson — OBERMEYER PLANEN + BERATEN GmbH — TECNIC Consulting Engineers

CONSULTANT / CONSULTANT

			Data / Date	Semnătură / Signature
Aprobat / Approved	Şef proiect / Project manager	R. Liuzza		
Aprobat / Approved	Coordonator Secţiune 1 / Section 1 Coordinator	C. Gambelli		
Verificat / Checked	Expert Cheie / Key Expert	V.Kallidromitis		

SUBCONTRACTANT / SUBCONTRACTOR — AREX LIDER COMPANY

Aprobat / Approved	Responsabil Subconsultant / Subconsultant Responsible	A. Dinulescu Stanciu	11.2011	
Întocmit / Elaborated	Proiectant / Designer	Olar Mihai Adrian	11.2011	

Reabilitarea liniei de cale ferata Braşov - Simeria, parte componentă a coridorului IV Pan European, pentru circulaţia trenurilor cu viteza maximă de 160 km/h,
Tronsonul : Braşov - Sighişoara
Rehabilitation of the railway line Braşov - Simeria, component Part of the IV Pan-European Corridor, for the trains circulation with maximum speed of 160 km/h,
Section : Braşov - Sighişoara

Proiect/Project *2004/RO/16/P/PA/003*

Faza / Phase: P.Th. / T.D.

Denumire desen / Drawing Title :

INTERVAL/SECTION ARCHITA-VANATORI
POD Km.Pr 266+382.312 L=35.00m / DISPOZITIE GENERALA
BRIDGE Design Km.266+382.312 L=35.00m / GENERAL LAYOUT

Codificare / Codification System	Scara / Scale	LOT / LOT	Nr. / No
EA51 01 C 16 PA PV 03 9 0 002 1	1:100 ; 1:200		01 / 01