SECTIUNE A-A / A-A SECTION

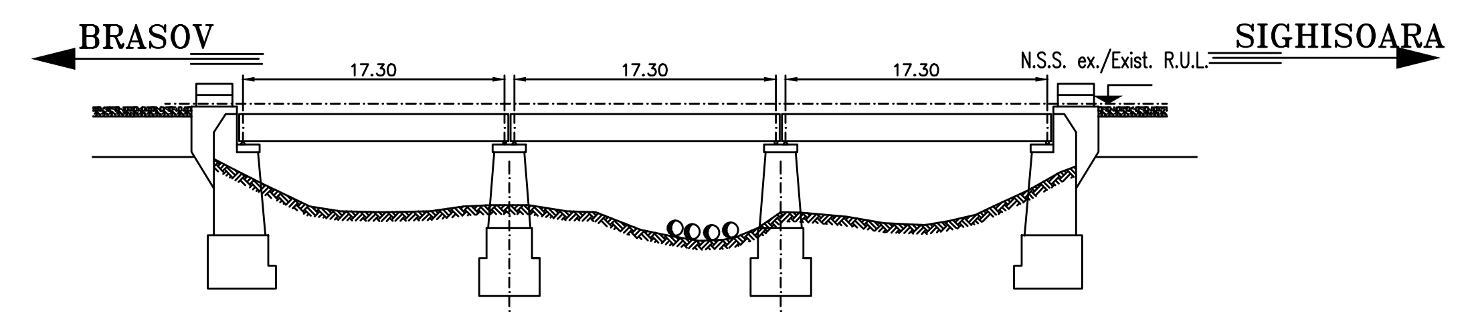
BRASOV
SIGHISOARA
17.30
17.30
17.30
N.S.S. ex./Exist. R.U.L.

LUCRARI PRGATITOARE

- in aval de podul existent, se executa o varianta provizorie de traseu care traverseaza albia paraului pe un pod provizoriu G22, la cca 25.00 m de linia I existenta, viteza de circulatie fiind restrictionata la 30.00 km/h;

- in amonte si aval de podul existent, la cca xx.00 de axa liniei I existente, se realizeaza doua diguri transversale din pamant, strabatute de min 4 tuburi metalice Ø 1000 mm, ce vor conduce debitul de apa in afara zonei de lucru;

- se evacueaza apa din incinta astfel creata, prin epuismente;

Preparatory works

- downstream from the existing bridge, at about 25.00 from the existing line I, a temporary route variant will be built crossing the riverbed on a provisory bridge G22, the existing traffic speed being restricted at 30.00km/h;

- upstream and downstream from the existing bridge, at about xx.00 from the axis of existing line I, two transversal earth dams will be built, through which min 4 metallic tubes Ø 1000 mm will pass, leading the water flow outside the work area;

- the enclosure thus obtained will be dewatered;

VEDERE IN PLAN

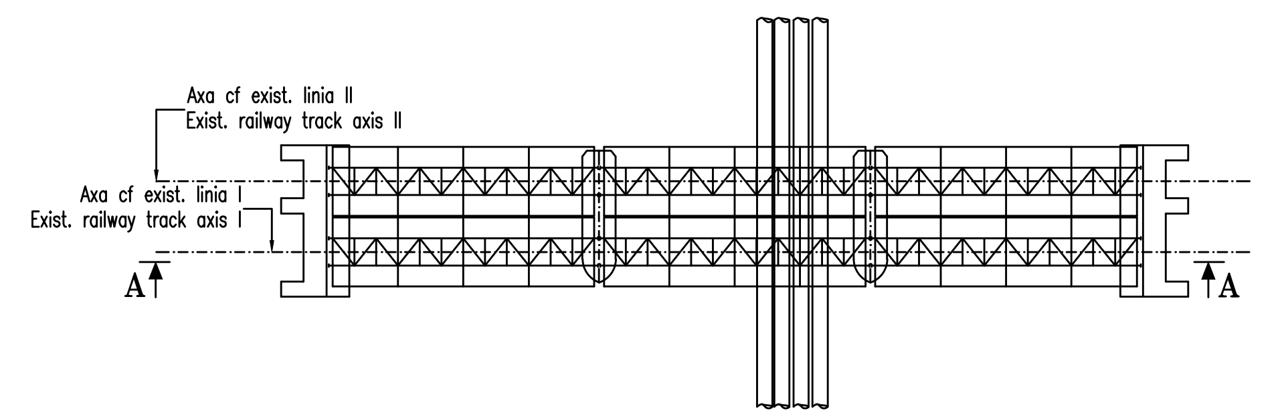
Axa cf exist. linia II
Exist. railway track axis II
Axa cf exist. linia I
Exist. railway track axis I
A
A

SECTIUNE B-B / B-B SECTION

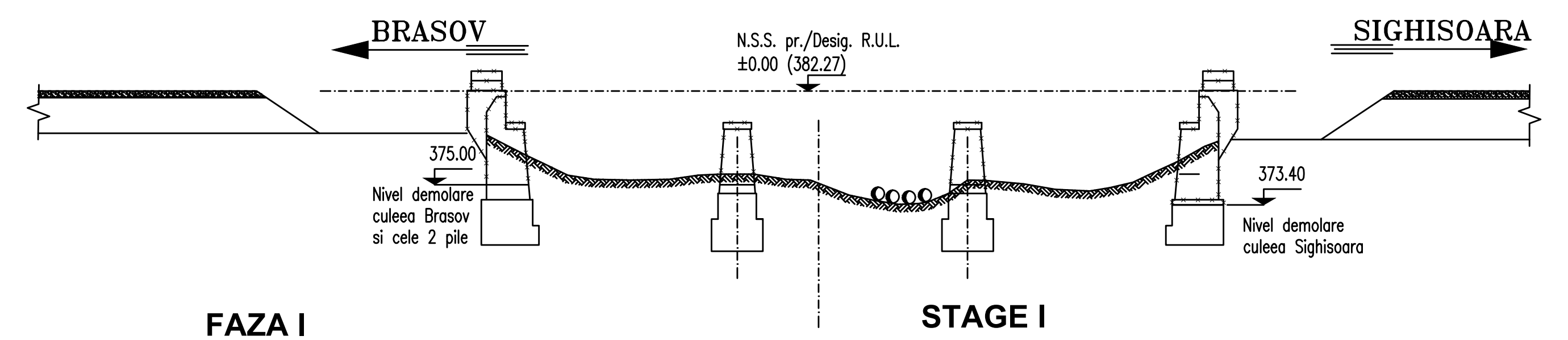
BRASOV
SIGHISOARA
N.S.S. pr./Desig. R.U.L.
±0.00 (382.27)
375.00
Nivel demolare
culeea Brasov
si cele 2 pile
373.40
Nivel demolare
culeea Sighisoara

FAZA I

Circulatie cu restrictie de viteza de 30 km/h pe varianta provizorie de traseu, circulatia inchisa pe liniile I si II existente

- se scot de sub tensiune liniile de contact aferente liniilor I si II existente;

- se demonteaza calea de pe podul existent si de pe terasament, pe zonele afectate de lucrarile la noul pod;

- se scot din cale tablierele existente si aparatele de reazem si se se transporta la depozit;

- se indeparteaza terasamentul pana la terenul natural pe o zona de cca 13.00 m in spatele culeiei Brasov existente si cca 8.00 m la culeea Sighisoara;

- se demoleaza culeea Brasov si cele 2 pile existente pana la cota 375.00 si culeea Sighisoara existenta, pana la cota 373.40;

STAGE I

Traffic with 30km/h speed restriction on the temporary route variant and traffic closure on the existing lines I and II

- the contact lines afferent to the existing lines I and II will be de-energized;

- the track on existing bridge and on the embankment will be demounted in the areas affected by the works for the new bridge;

- the existing decks and the bearing blocks will be removed from the track and transported to the storage place;

- the embankment will be removed up to the natural ground for about 13.00 m behind the existing Brasov abutment and about 8.00 m for Sighisoara abutment;

- Brasov abutment and the 2 existing piers will be demounted up to 375.00 level and the existing Sighisoara abutment up to 373.40 level;

VEDERE IN PLAN

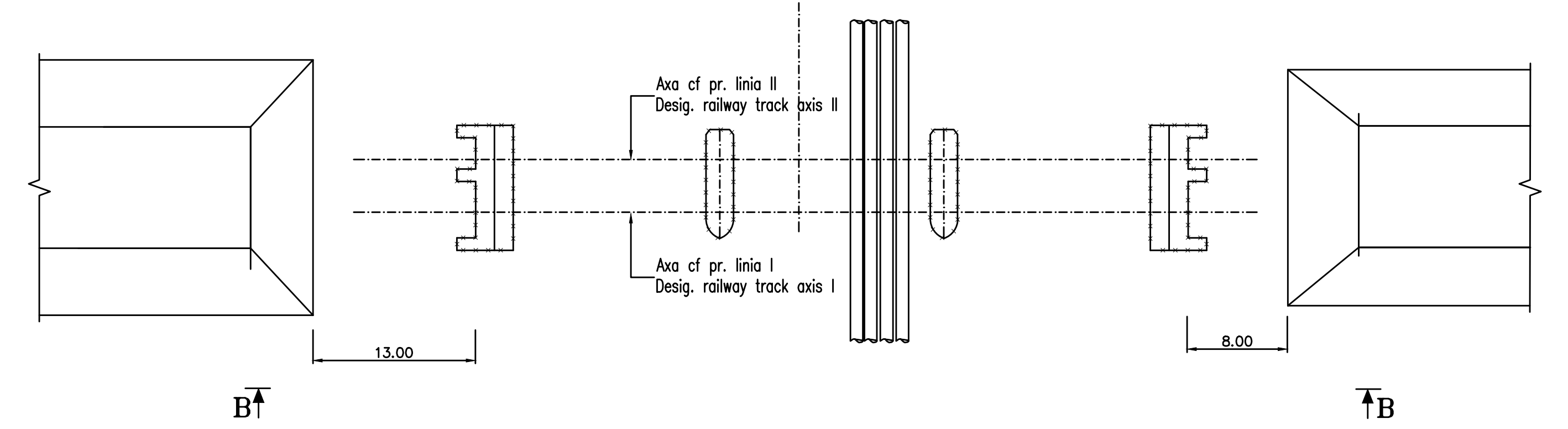
Axa cf pr. linia II
Desig. railway track axis II
Axa cf pr. linia I
Desig. railway track axis I
13.00
8.00
B
B

SECTIUNE C-C / C-C SECTION

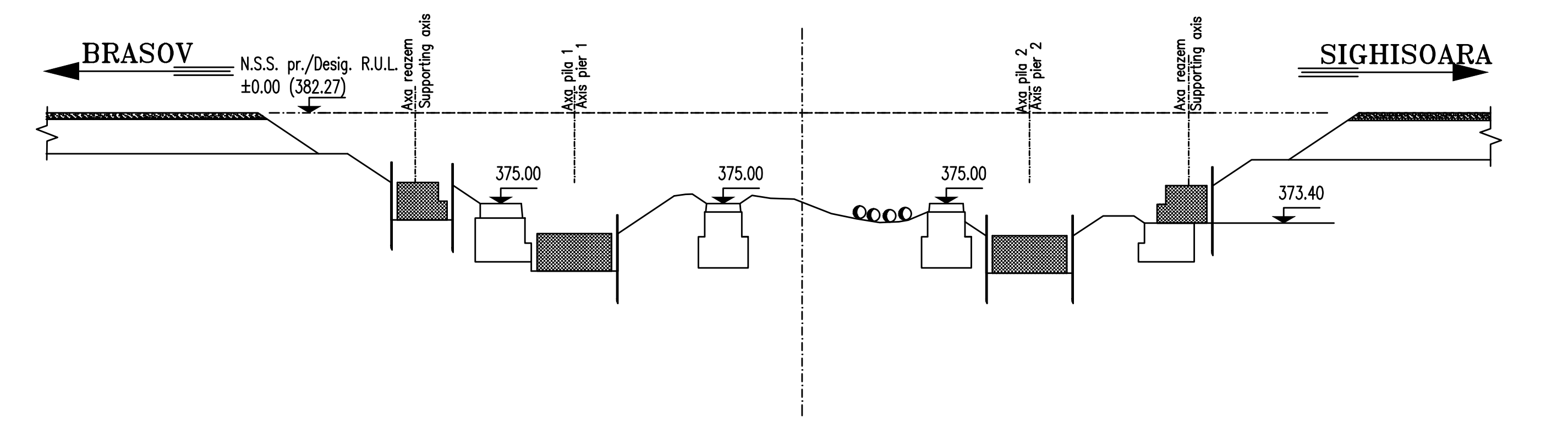
BRASOV
SIGHISOARA
N.S.S. pr./Desig. R.U.L.
±0.00 (382.27)
Axa reazem
Supporting axis
Axa pila 1
Axis pier 1
Axa pila 2
Axis pier 2
Axa reazem
Supporting axis
375.00
375.00
375.00
373.40

- se executa sapaturile necesare pentru realizarea fundatiilor culeilor si pilelor podului nou, cu sprijiniri pana la partea superioara a fundatiilor si cu taluz de 2:3 pana la terenul natural;

- se cofreaza si se betoneaza fundatiile culeilor si pilelor noului pod;

- the required excavations will be carried out for the foundations of abutment and piers for the new bridge, with propping up to the upper part of foundations and with 2:3 slope up to the natural ground;

- the foundations of abutments and piers for the new bridge will be molded and concreted;

VEDERE IN PLAN

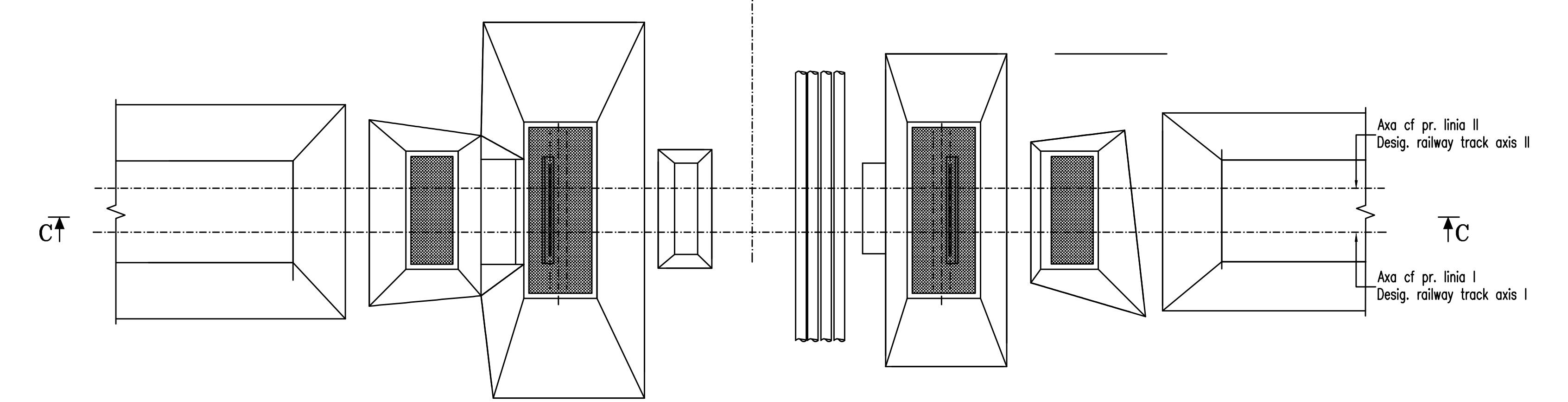
C
C
Axa cf pr. linia II
Desig. railway track axis II
Axa cf pr. linia I
Desig. railway track axis I

SECTIUNE D-D / D-D SECTION

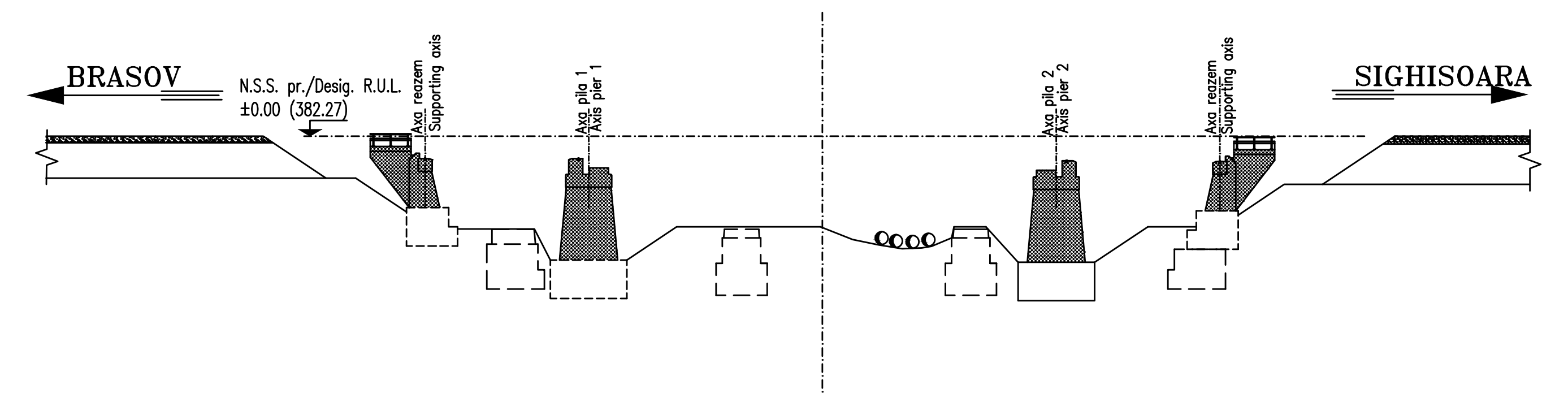
BRASOV
SIGHISOARA
N.S.S. pr./Desig. R.U.L.
±0.00 (382.27)
Axa reazem
Supporting axis
Axa pila 1
Axis pier 1
Axa pila 2
Axis pier 2
Axa reazem
Supporting axis

- se realizeaza umplutura in jurul fundatiilor;

- se executa elevatiile culeilor si pilelor noului pod, bancheta cuzinetilor, cuzinetii, zidul de garda si zidurile intoarse ale culeilor, trotuare si parapetele aferente culeilor;

- se realizeaza umplutura din spatele si in jurul culeilor noi, corespunzator profilului terasamentului proiectat in zona podului (in straturi succesive, bine compactate, conform caietului de sarcini), avandu-se in vedere cota corectiei albiei sub pod (intre pile si intre pile si culei) si in amonte si aval de acesta;

- se executa drenul din spatele culeilor;

- the filling will be made around the foundations;

- the following will be built: elevations of abutments and piers for the new bridge, berm of bearing boxes, bearing boxes, guard wall and reverted walls of abutments, sidewalks and parapets related to the abutments;

- the filling will be made behind and around the new abutments according to the embankment profile designed in the bridge area (in well compacted successive layers according to the Technical Specifications), taking into account the riverbed correction level under the bridge (between the piers and between the piers and the abutments) and upstream and downstream from it;

- the drain will be built behind the abutments;

VEDERE IN PLAN

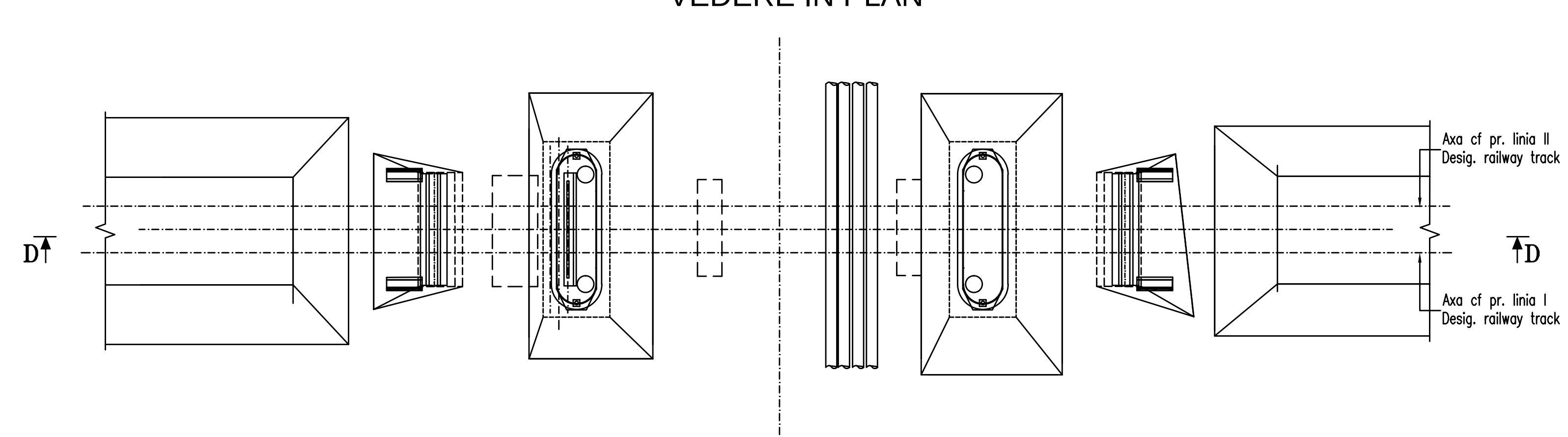
D
D
Axa cf pr. linia II
Desig. railway track axis II
Axa cf pr. linia I
Desig. railway track axis I

SECTIUNE E-E / E-E SECTION

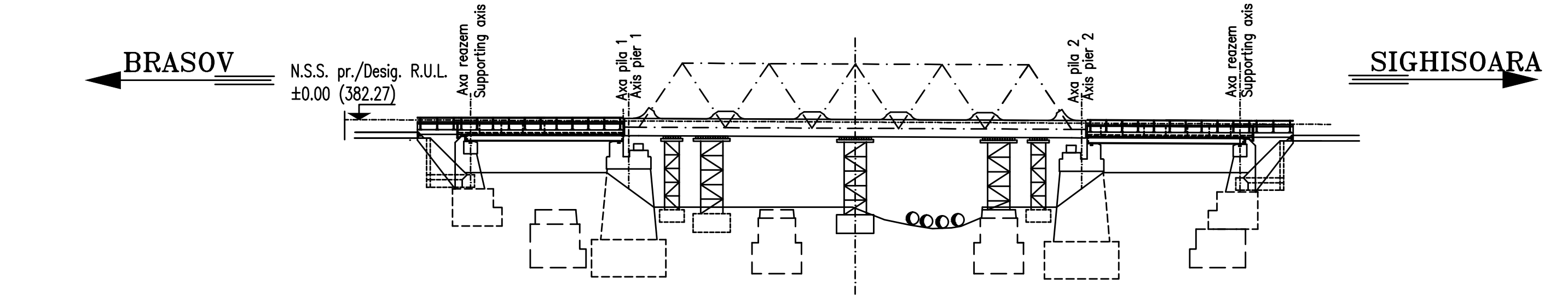
BRASOV
SIGHISOARA
N.S.S. pr./Desig. R.U.L.
±0.00 (382.27)
Axa reazem
Supporting axis
Axa pila 1
Axis pier 1
Axa pila 2
Axis pier 2
Axa reazem
Supporting axis

- se executa in axa longitudinala a podului, intre cele doua pile, o schela pentru montarea tablierului metalic, grinzi cu zabrele;

- se incepe montarea tablierului g.z.;

- dupa ce betonul din elevatiile culeilor si a pilelor a atins o rezistenta de minim 100 kg/cm^2, dar nu mai devreme de 7 zile de la turnare, se poate trece la realizarea tablierelor GIB de 12.00 m deschidere, cale dubla (montarea esafodajului de sustinere, pozarea grinzilor metalice, realizarea cofrajului, armarea dalei, turnarea betonului in dala;

- dupa ce betonul din dale a atins o rezistenta de minim 100 kg/cm ^{2}, dar nu mai devreme de 7 zile de la turnare, se poate trece la echiparea tablierelor (turnarea betonului de panta, asternerea stratului hidroizolant si betonul de protectie al hidroizolatiei;

- se cofreaza, se armeaza si se toarna betonul in timpanele dalelor si trotuare;

- se monteaza parapetele la trotuare;

- se executa lucrarile necesare pentru racordarea culeilor podului la teren;

- se definitiveaza lucrarile de terasamente si suprastructura a caii pana la pod;

- se racordeaza calea de pe pod cu calea de pe terasamentul nou proiectat;

- in paralel, in albie, in amonte si aval de pod, se executa lucrarile de amenajare si corectare a acsteia;

- a scaffold to mount the metallic deck with lattice girders will be also erected in the longitudinal axis of the bridge between the two piers;

- the lattice girder deck will be mounted;

- when the concrete in the elevations of abutments and piers reached minimum 100kg./cm2 resistance, but no earlier than 7 days from casting, the GIB decks of 12.00 m span for double track can be built (mounting the supporting scaffolds, laying the steel girders, making the shuttering, reinforcement of the slab, concrete casting in the slab);

- when the concrete in the slabs reached minimum 100kg./cm2 resistance, but no earlier than 7 days from casting, the decks will be equipped (casting the slope concrete, placing the waterproofing layer and the afferent protection concrete);

- the concrete will be molded, reinforced and cast in the tympana of the slabs and sidewalks;

- parapets will be mounted for the sidewalks;

- the required works will be carried out to link the bridge abutments to the ground;

- the track embankment and superstructure works will be finalized up to the bridge;

- the track on the bridge will be connected to the track on the new designed embankment;

- at the same time, the riverbed arrangement and improvement works will be carried out upstream and downstream from the bridge;

VEDERE IN PLAN

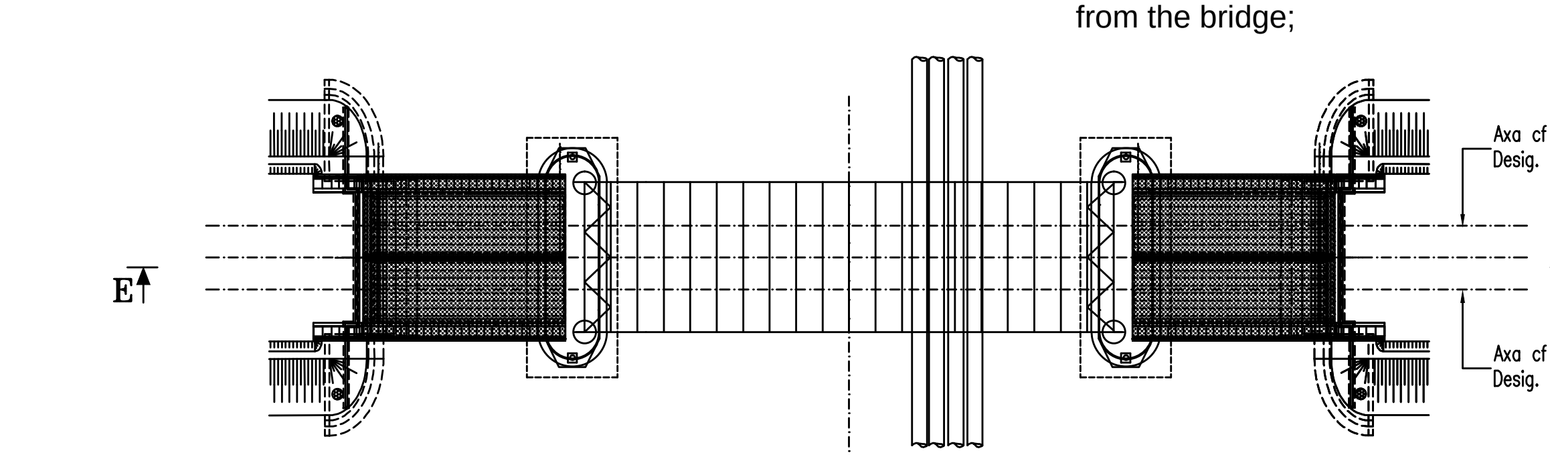
E
E
Axa cf pr. linia II
Desig. railway track axis II
Axa cf pr. linia I
Desig. railway track axis I

SECTIUNE F-F / F-F SECTION

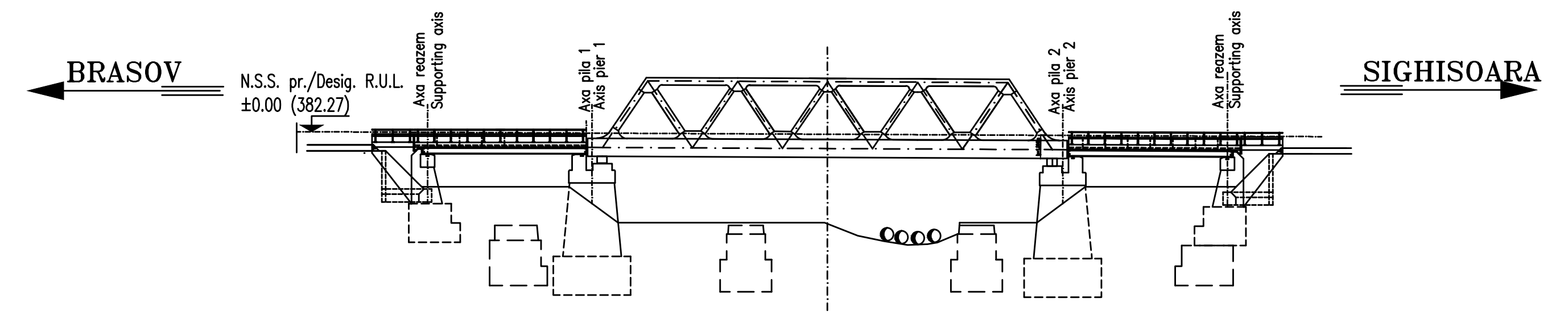
BRASOV
SIGHISOARA
N.S.S. pr./Desig. R.U.L.
±0.00 (382.27)
Axa reazem
Supporting axis
Axa pila 1
Axis pier 1
Axa pila 2
Axis pier 2
Axa reazem
Supporting axis

- dupa montarea pe schela a structurii metalice a tablierului g. z., acesta se ridica cu prese de pe calajele de lemn si se pozitioneaza pe reazemele de pe pile;

- se cofreaza, armeaza si se betoneaza cuvele din beton armat;

- se demonteaza schela de montaj a tablierului;

- dupa ce betonul din cuve a ajuns la rezistenta de min 100 kg/cm ^{2}, dar nu mai devreme de 7 zile de la turnare, se trece la echiparea tablierului (se toarna betonul de panta, se asterne stratul hidroizolant si se toarna betonul de protectie al acestuia;

- dupa intarirea betonului de protectie al hidroizolatiei, se executa prisma de piatara sparta si lucrarile de suprastructura a caii (traverse, sine etc), acrdandu-se atentie asupra racordarii acestia pe toata lungimea podului si la trecerea pe terasament;

- se monteaza contrasinele;

- se executa scarile de acces pe terasament;

- se executa lucrarile de amenajare si corectie a albiei sub pod si zonele imediat adiacente, in incinta existenta;

- se definitiveaza montarea liniilor de contact pe pod si racordarea acesteia cu cea de pe terasament;

- se pune sub tensiune linia de contact;

- se deschide circulatia cu viteza normala, pe pod, pe ambele linii, in trepte de viteza, conform instructiilor de cale ferata in vigoare;

- after mounting the metallic structure of the lattice girder deck by help of the scaffold, the deck will be lifted by press from the wood wedges and will be positioned on the supports on the piers;

- the concrete will be will be molded, reinforced and cast in the reinforced concrete boxes;

- the mounting scaffold for the deck will be dismantled;

- when the concrete in the box reached minimum 100kg./cm2 resistance, but no earlier than 7 days from casting, the decks will be equipped (casting the slope concrete, placing the waterproofing layer and casting the afferent protective concrete);

- when the protective concrete of the waterproofing system hardened, the crushed stone prism and the track superstructure works will be performed (sleepers, rails etc), giving attention to its connection all along the bridge and on the transition to the embankment;

- the guard rails will be mounted;

- the access stair will be built on the embankment;

- the arrangement and improvement works for the riverbed will be carried out under the bridge and in the adjacent areas, in the existing enclosure;

- the contact lines will be permanently mounted on the bridge and its connection with the one on the embankment;

- the contact line will be put under voltage again;

- the traffic will be opened at normal speed on the bridge, on both lines, with speed steps according to the railway instructions in force ;

VEDERE IN PLAN

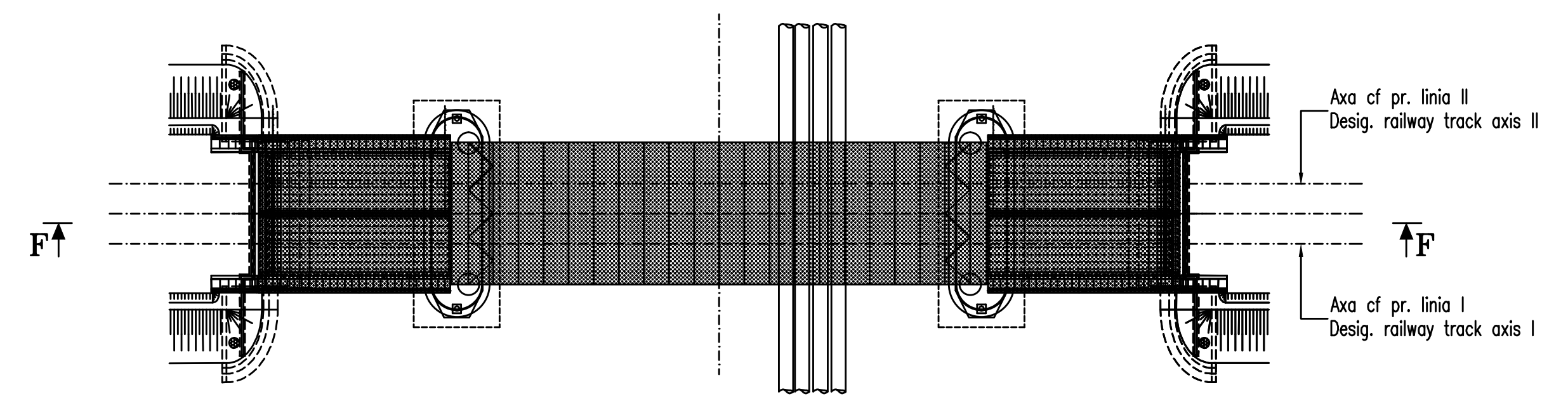
F
F
Axa cf pr. linia II
Desig. railway track axis II
Axa cf pr. linia I
Desig. railway track axis I

SECTIUNE G-G / G-G SECTION

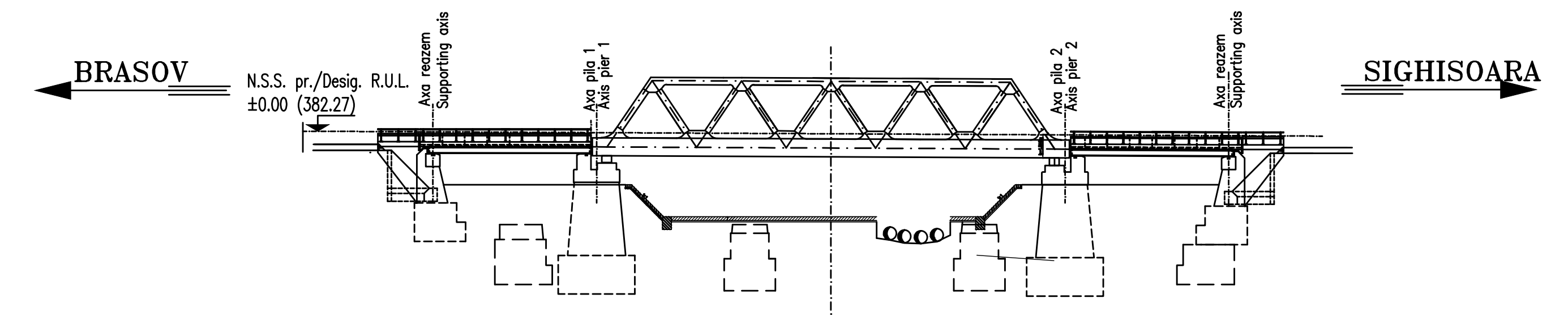
BRASOV
SIGHISOARA
N.S.S. pr./Desig. R.U.L.
±0.00 (382.27)
Axa reazem
Supporting axis
Axa pila 1
Axis pier 1
Axa pila 2
Axis pier 2
Axa reazem
Supporting axis

FAZA II

Circulatie cu viteza nomala pe liniile I si II proiectate (pe podul nou) si circulatie inchisa pe varianta provizorie de traseu

- se executa alte doua diguri de pamant, in interiorul incintei existente, in zone in care lucrarile de amenajare si corectie a albiei au fost executate;

- se demoleaza digurile initiale si se completeaza protectia si pe amplasamentul acestora;

- se schimba cursul apei prin mutarea tuburilor intr-o zona cu protectia finalizata si se completeaza lucrarea pe amplasamentul initial al tuburilor metalice;

- se demoleaza si digurile secundare si se scot din amplasament tuburile metalice care au asigurat tranzitarea debitului prin zona de lucru;

- se dezafecteaza varianta provizorie de traseu.

STAGE II

Traffic with normal speed on the designed lines I and II (on the new bridge) and traffic closure on the temporary route variant

- other two earth dams will be built inside the existing enclosure, in the areas where the riverbed arrangement and improvement works are completed;

- the initial dams will be demolished and the protection will be also built in their location;

- the water course will be changed by moving the tubes in a completely protected area and the work will be performed in the initial location of the metallic tubes;

- the secondary dams will be demolished and the metallic tubes ensuring the water flow transit through the work area will be also removed from this location;

- the temporary route variant will be out of operation.

VEDERE IN PLAN

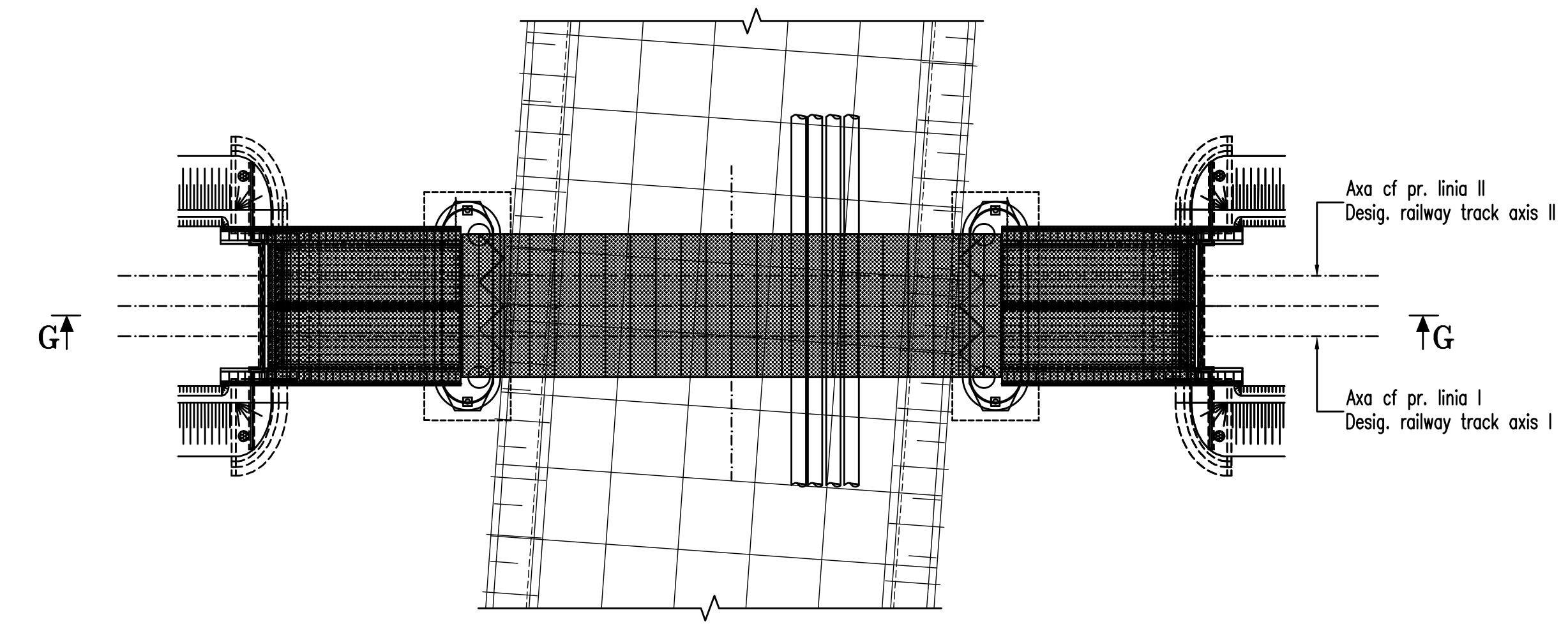
G
G
Axa cf pr. linia II
Desig. railway track axis II
Axa cf pr. linia I
Desig. railway track axis I

D					
C					
B					
A	12.2011	Revizia 1 1 Revision	Vasile Stirbu		
Indice Index	Data Date	Modificare Modification/Revision	Proiectant Designer	Aprobat Consultant Approved Consultant	Aprobat CFR Approved CFR

GUVERNUL ROMANIEI
ROMANIAN GOVERNMENT

PROIECT FINANȚAT DE UNIUNEA EURO
EUROPEAN UNION FINANCED PR

CFR

C.N.C.F. "C.F.R." - S.A.

CLIENT / CLIENT

ITALFERR
GRUPPO FERROVIE DELLO STATO
Joint Venture leader

Scott Wilson

OBERMEYER
PLANEN + BERATEN GmbH

TECNIC
Consulting Engineers

CONSULTANT / CONSULTANT			Data Date	Semnătură Signature
Aprobat Approved	Şef proiect Project manager	R. Liuzza		
Aprobat Approved	Coordonator Secțiune 1 Section 1 Coordinator	C. Gambelli		
Verificat Checked	Expert Cheie Checking Expert	V.Kallidromitis		

SUBCONTRACTANT / SUBCONTRACTOR

AREX

Aprobat Approved	Responsabil Subconsultant Subconsultant Responsible	A. Dinulescu Stanciu	11.2011	
Întocmit Elaborated	Proiectant Designer	Vasile Stirbu	11.2011	

Reabilitarea liniei de cale ferata Brașov - Simeria, parte componentă a coridorului IV Pan European, pentru circulația trenurilor cu viteza maximă de 160 km/h,
Tronsonul : Brașov - Sighișoara
Rehabilitation of the railway line Brașov - Simeria, component Part of the IV Pan-European Corridor, for the trains circulation with maximum speed of 160 km/h,
Section : Brașov - Sighișoara

Proiect/Project
2004/RO/16/P/PA/003

Faza / Phase:
P.Th. / T.D.

Denumire desen / Drawing Title :

INTERVAL / SECTION ARCHITA - VANATORI

POD / BRIDGE Km 267+963.152 D=12.00m+35.00m+12.00m

PROCES TEHNOLOGIC / SEQUENCE OF OPERATIONS

Codificare / Codification System	Scara / Scale 1:500	LOT / LOT	Nr. / No 01 / 01

E A 5 1 | 0 1 | C | 1 6 | D X | P V | 0 4 0 | 0 | 0 0 3 | 1

2096x297=.62mp