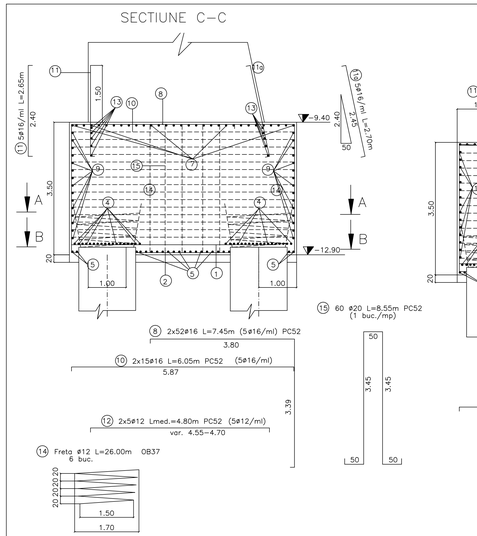

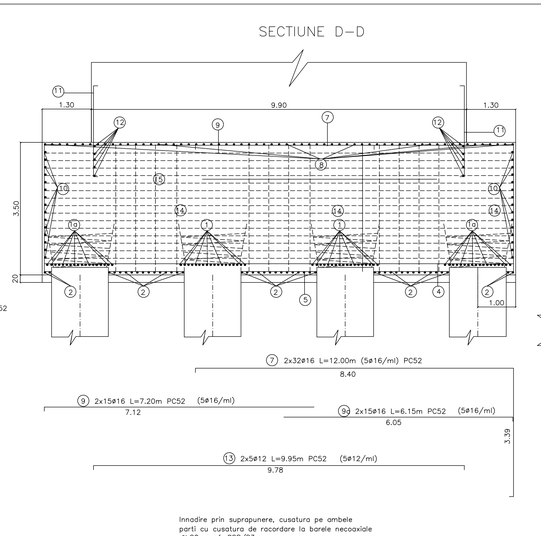

Innodire prin suprapunere, cusatura pe ambele
parti cu cusatura de racordare la barele necoaxiale
ø20, conf. C28/83.

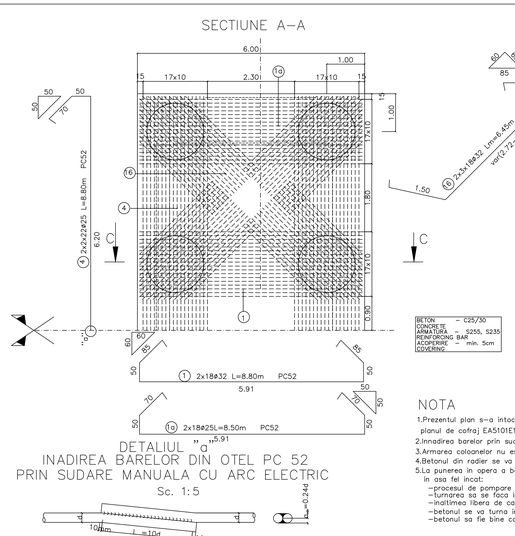

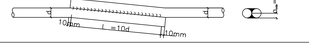

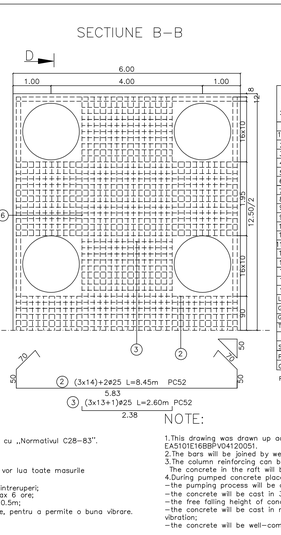

NOTA

1.Prezentul plan s–a intocmit in conformitate cu
planul de cofraj EA5101E16BBPV04120051.
2.Inadirea barelor prin sudura, se va face in conformitate cu „Normativul C28–83".
3.Armarea coloanelor nu este cuprinsa in plan.
4.Betonul din radier se va turna prin pompare.
5.La punerea in opera a betonului turnat prin pompare se vor lua toate masurile
in asa fel incat:
–procesul de pompare sa se desfasoare continua fara intreruperi;
–turnarea sa se faca in 3(trei) puncte si sa dureze max 6 ore;
–inaltimea libera de cadere a betonului sa fie de max 0.5m;
–betonul se va turna in straturi de max. 40cm grosime, pentru a permite o buna vibrare.
–betonul sa fie bine compactat prin vibrare.

NOTE:

1.This drawing was drawn up according to the shuttering plan
EA5101E16BBPV04120051.
2.The bars will be joined by welding according to "Norm C28 – 83".
3.The column reinforcing can be not found in drawing.
The concrete in the raft will be cast by pumping.
4.During pumped concrete placement, all measures will be taken so that:
–the pumping process will be continuous, without any interruption;
–the concrete will be cast in 3 (three) points and will last max. 6 hours;
–the free falling height of concrete will be max. 0.5m;
–the concrete will be cast in max. 40 cm thick layers to allow good
vibration;
–the concrete will be well–compacted by vibration.

MASURATOAREA OTELULUI BETON NECESAR PENTRU ARMAREA RADIERULUI

Marca Elementului / Element Mark	Cantitatea / Quantity	Lungimea / Length	Lungimi Totale / Total Lengths					
			OB 37	PC 52				
			Partiale	S 255	S 355	S 345	S 335	
				ø12	ø12	ø16	ø20	ø25	ø32
1	32	36	8.80						316.80
1a	25	36	8.50				306.00		
2	25	42	8.45				354.90		
3	25	40	2.60				104.00		
4	25	88	8.80				774.40		
5	25	36	7.25				261.00		
6	25	54	2.15				116.10		
7	16	64	12.00			768.00			
8	16	126	7.45			938.70			
9	16	30	7.20			216.00			
9a	16	30	6.15			184.50			
10	16	30	6.05			181.50			
11	16	100	2.65			265.00			
11a	16	56	2.70			151.20			
12	12	10	4.80		48.00				
13	12	10	9.95		99.50				
14	12	6	26.00	156.00					
15	20	60	8.55				513.00		
16	32	108	6.45						696.60
Lungimi pe diametru				156.00	135.50	2204.60	427.50	1495.95	1016.50
Greutate pe mi.				0.888	0.888	1.578	2.470	3.853	6.313
Greutate pe diam.				139	131	4030	1267	7384	6398
Total pe calitate				139		19210			
TOTAL						19350			
Sudura 2% (kg)						387			
Pierderi 5% (kg)						968			
GREUTATE TOTALA (kg)						20700			

PENTRU 2 RADIERE: 2x20700 kg =41500 kg

Se interzice copierea, difuzarea, imprumutarea sau utilizarea in alte scopuri, fara permisiunea Arex Lider Company ca proprietar al desenului. This drawing is forbidden to be copied, lent or used in other purposes than those previously approved by Arex Lider Company as its owner.

Index Indice	Data Date	Modificare Modification/Revision	Proiectant Designer	Aprobat Consultant Approved Consultant	Aprobat CFR Approved CFR
D					
C					
B					
A					

GUVERNUL ROMANIEI
ROMANIAN GOVERNMENT

PROIECT FINANTAT DE UNIUNEA EUROPEANA
EUROPEAN UNION FINANCED P

C.N.C.F. "C.F.R." - S.A.

CLIENT / CLIENT

ITALFERR GRUPPO FERROVIE DELLO STATO
Joint Venture leader
Scott Wilson
OBERMEYER PLANEN + BERATEN GMBH
TECNIC Consulting Engineers

CONSULTANT / CONSULTANT

			Data Date	Semnatura Signature
Aprobat Approved	Sef proiect Project manager	R. Liuzza	03.2012	
Aprobat Approved	Coordonator Sectiune 1 Section 1 Coordinator	C. Gambelli	03.2012	
Verificat Checked	Expert Checks Checking Expert	V. Kalliakmanis	03.2012	

SUBCONTRACTANT / SUBCONTRACTOR AREX

Aprobat Approved	Responsabil Subconsultant Subconsultant Responsible	A.Stanciu - Dinulescu	03.2012	
Intocmit Elaborated	Proiectant Designer	Ioan Rentea	03.2012	

Reabilitarea liniei de cale ferata Brasov - Simeria, parte component a a coridorului IV Pan European, pentru circula la tranzitor cu viteza maxima de 160 km/h,
Transeoul : Brasov - Sighisoara
Rehabilitation of the railway line Brasov - Simeria, component Part of the IV Pan-European Corridor, for the trains circulation with maximum speed of 160 km/h,
Section : Brasov - Sighisoara

Proiect/Project
2004RO16PP04002

Faza / Phase:
D.E. / E.D.

Denumire desen / Drawing Title :
INTERVAL ARCHITA - VANATORI
Pod km. 269+868.474 D=45.00m
Plan armare radier cala (pod cale simpla)
Bridge km. 269+868.474 D=45.00m
Plan for raft reinforcement abutment simple railway bridge

Codificare / Codification System	Scara / Scale 1:50	LOT / LOT	Nr. / No 01 / 01
E A 5 1 0 1 E 1 6 B C P V 0 4 1 2 0 1 0 0			

297x1300