VEDERE A–A / A–A VIEW

Sc 1:100

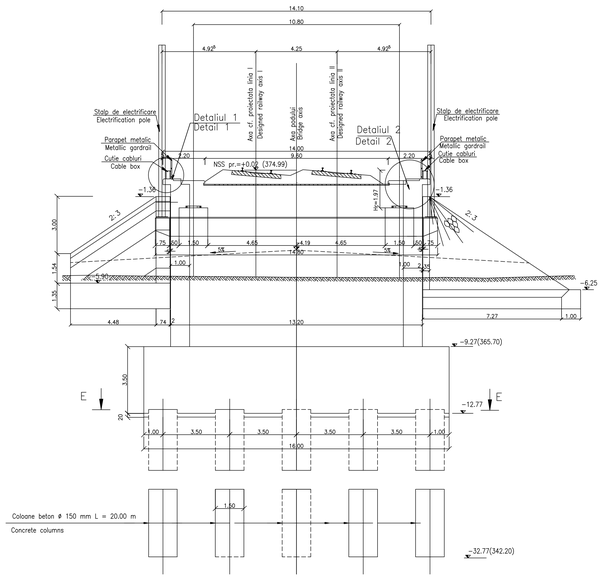

PLAN / PLANE VIEW

Sc 1:100

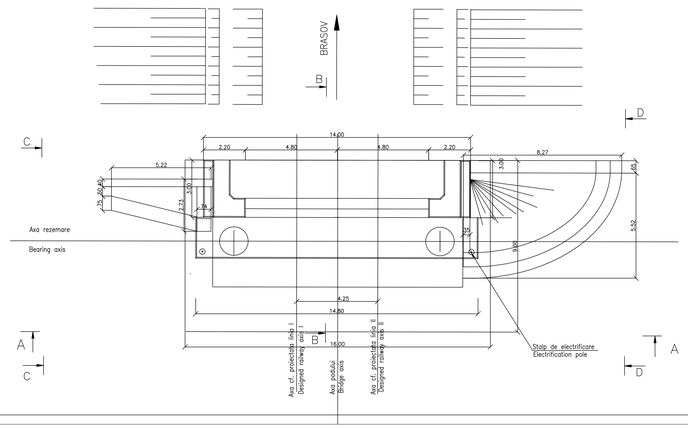

SECTIUNEA B–B

Sc 1:100

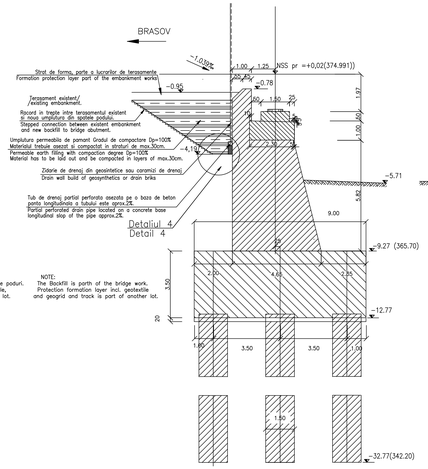

NOTA:
Umplutura face parte din lucrarile de poduri. Stratul de forma includ geo-textile, geo-grilele si colea fac parte din alt lot.

NOTE:
The Backfill is parth of the bridge work. Protection formation layer incl. geotextile and geogrid and track is part of another lot.

Detaliul/Detail 1

Sc 1:50

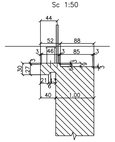

Detaliul/Detail 2

Sc 1:50

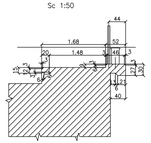

Detaliul/Detail 3

Sc 1:10

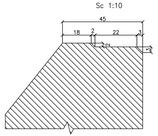

SECTIUNEA E–E/E–E SECTION

Sc 1:100

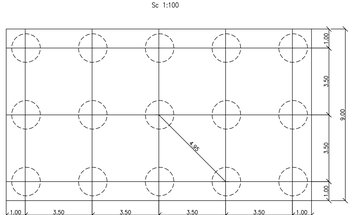

VEDERE C–C / C–C VIEW

Sc 1:100

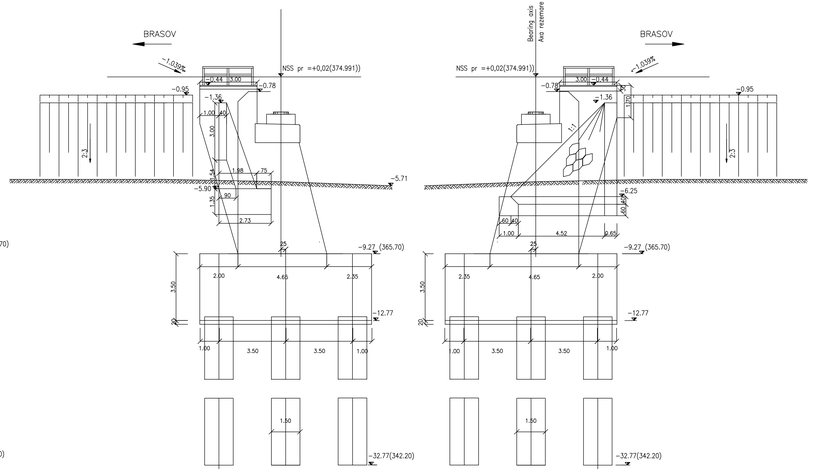

VEDERE D–D / D–D VIEW

Sc 1:100

Detaliul 4/ 4 Detail

SISTEM DE DRENARE A APELOR DIN SPATELE CULEELOR
SYSTEM FOR DRAINAGE THE WATER FROM BEHIND THE ABUTMENTS

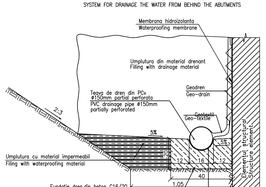

LEGENDA BETOANELOR/CONCRETE LIST

Beton armat in cuzineti si in bancheta cuzinetilor

Reinforced concrete in the cushions and cushions bench

C 35/45–CEM I/A–S 52,5–(XC4+XF3+XA2)–A/C=0,50–D 16–Cl 0,20 max

Beton armat in fundatii indirecte(coloane si radiere) si in elevatii:

Plain concrete in abutments foundations:

C 25/30–CEM II/A–S 42,5–(XC4+XF3)–A/C=0,50–D 32–Cl 0,20 max

Beton simplu in fundatii si elevatia aripilor:

Simple concrete foundations and elevation in the wings::

C 25/30–CEM II/A–S 32,5–(XF1)–A/C=0,50–D 32–Cl 0,20 max

Beton de egalizare

Concrete leveling

C 25/30–CEM II/A–S 32,5–(XF3)–A/C=0,55–D 16–Cl 0,20 max

In cazul in care temperatura in timpul turnarii este scazuta, se vor folosi cimenturile cu rezistenta initiala mare, R si aditivi accelaratori, iar in cazul turnarii pe timp caldurus, cimenturile cu rezistenta initiala uzuda, N si aditivi intarzietori (conf. NE 012/2–2010 si tabelului 2 din SR EN 197–1:2002)
When the temperature during the casting is low, cements with high initial resistance, R and accelerating additives shall be used and when it is cast during warm weather, cements with common initial resistance, N and delaying additives shall be used (according the norm NE 012/2–2010 and table 2 for the SR EN197–1:2002).

NOTA

1. Prezentul plan s–a intocmit in conformitate cu dispozitia generala EA5101C16PAPV04100020–2011.
2. Executia partilor superioare ale cuzinetilor, amplasate deasupra banchetei cuzinetilor, se va face numai dupa procurarea aparatelor de reazem.
Nivelele superioare ale cuzinetilor se vor stabili dupa procurarea aparatelor de reazem, in functie de inaltimile fiecarui tip de aparat.
Executia zidurilor intoarse si a zidului de garda se va face dupa asezarea tablierului pe reazeme.
3. La executie se vor respecta cu stricte prevederile din "Normativ pentru producerea betonului", indicativ NE 012/1–2007 si "Normativ pentru producerea betonului si executarea lucrarilor din beton, beton armat si beton precomprimat. Partea 2: Executarea lucrarilor din beton", indicativ NE 012/2–2010, iar verificarea calitatii lucrarilor si receptionarea lor se va face conform normativului C56–1985.
4. Constructia se incadreaza in categoria B de importanta. Constructii de importanta deosebita, modelul 1 de asigurare a calitatii conform HG 766/97.
5. Podul corespunde la convoaiele de calcul UIC (LM71 si SW/2).

NOTE:

1. This plan has been drawn up according to the general disposition EA5101C16PAPV04100020–2011.
2. The upper parts of the bearing placed over the bearing seat shall be built only after the procurement of the bearing blocks. the upper level of the bearings shall be established after the procurement of the bearing blocks depending on the height of the each bearing block type.
The reverted walls and the guard wall shall be carried out after putting the desk on the supports.
3. The execution will strictly comply with the provisions of "Practice code for concrete production NE 012/1–2007 and "Practice code for the concrete production and works execution, reinforced and pre–stressed concrete – Port 2: The execution of concrete works." NE 012/2–2010, and the quality and the reception of the works shall be made accordingly to Norm C 56–1985.
4. The construction is classified in the B category of importance. Special importance constructions, model 1 for quality ensuring according to HG 766/97.
5. Bridge convoys calculation corresponds to UIC (LM71 and SW/2).

Aprovizionarea aparatelor de reazem se va face inaintea executarii cuzinetilor si a banchetei acestora. In cazul in care inaltimea aparatelor de reazem aprovizionate difera fata de cea considerata in proiect se vor modifica inaltimile pe reazem corespunzator cu noile aparate.
The bearing blocks shall be supplied before building the bearings and their seats. In case the height of the supplied bearing blocks differs from that given in the project, the heights on the seats shall be adjusted so as to comply with the new devices.

This drawing is forbidden to be copied, lent or used in other purposes than those previously approved by AREX Lider Company as its owner.
Se interzice copierea, difuzarea, imprumutarea sau utilizarea in alte scopuri, fara permisiunea AREX Lider Company ca proprietar al desenului.

Indice Index	Data Date	Modificare Modification/Revision	Proiectant Designer	Aprobat Consultant Approved Consultant	Aprobat CFR Approved CFR
D					
C					
B					
A	12.2011	Revizie 1 / 1 Revision	Constantin Miculete		

GUVERNUL ROMANIEI
ROMANIAN GOVERNMENT

PROIECT FINANTAT DE UNIUNEA EUROPEANA
EUROPEAN UNION FINANCED PROJECT

CLIENT / CLIENT: C.N.C.F. "C.F.R." - S.A.

ITALFERR GRUPPO FERROVIE DELLO STATO – Joint Venture leader; Scott Wilson; OBERMEYER PLANEN + BERATEN GmbH; TECNIC Consulting Engineers

CONSULTANT / CONSULTANT

			Data Date	Semnătură Signature
Aprobat Approved	Şef proiect Project manager	R. Liuzza		
Aprobat Approved	Coordonator Sec.fune 1 Section 1 Coordinator	C. Gambelli		
Verificat Checked	Expert Cheie Checking Expert	V.Kelldiromitis		

SUBCONTRACTANT / SUBCONTRACTOR: AREX LIDER

Aprobat Approved	Responsabil Subconsultant Subconsultant Responsible	A. Dinulescu Stanciu	11.2011	
Întocmit Elaborated	Proiectant Designer	Constantin Miculete	11.2011	

Reabilitarea liniei de cale ferata Brasov - Simeria, parte componentă a coridorului IV Pan European, pentru circulația trenurilor cu viteza maximă de 160 km/h,
Tronsonul : Brașov - Sighișoara
Rehabilitation of the railway line Brasov - Simeria, component Part of the IV Pan-European Corridor, for the trains circulation with maximum speed of 160 km/h,
Section : Brasov - Sighisoara

Proiect/Project 2004/RO/16/P/PA/003

Faza / Phase: P.Th. / T.D.

Denumire desen / Drawing Title : INTERVAL / SECTION ARCHITA - VANATORI
POD / BRIDGE Km 269+868.474 D=45.00m
PLAN COFRAJ CULEEA BRASOV pod cale dubla /
/FORMWORK PLANE BRASOV ABUTMENT double railway bridge

Codificare / Codification System	Scara / Scale 1:100 1:50 1:10	LOT / LOT	Nr. / No 01 / 01
E A 5 1 0 1 E 1 6 B B P V 0 4 1 2 0 0 3 1			

594x1289