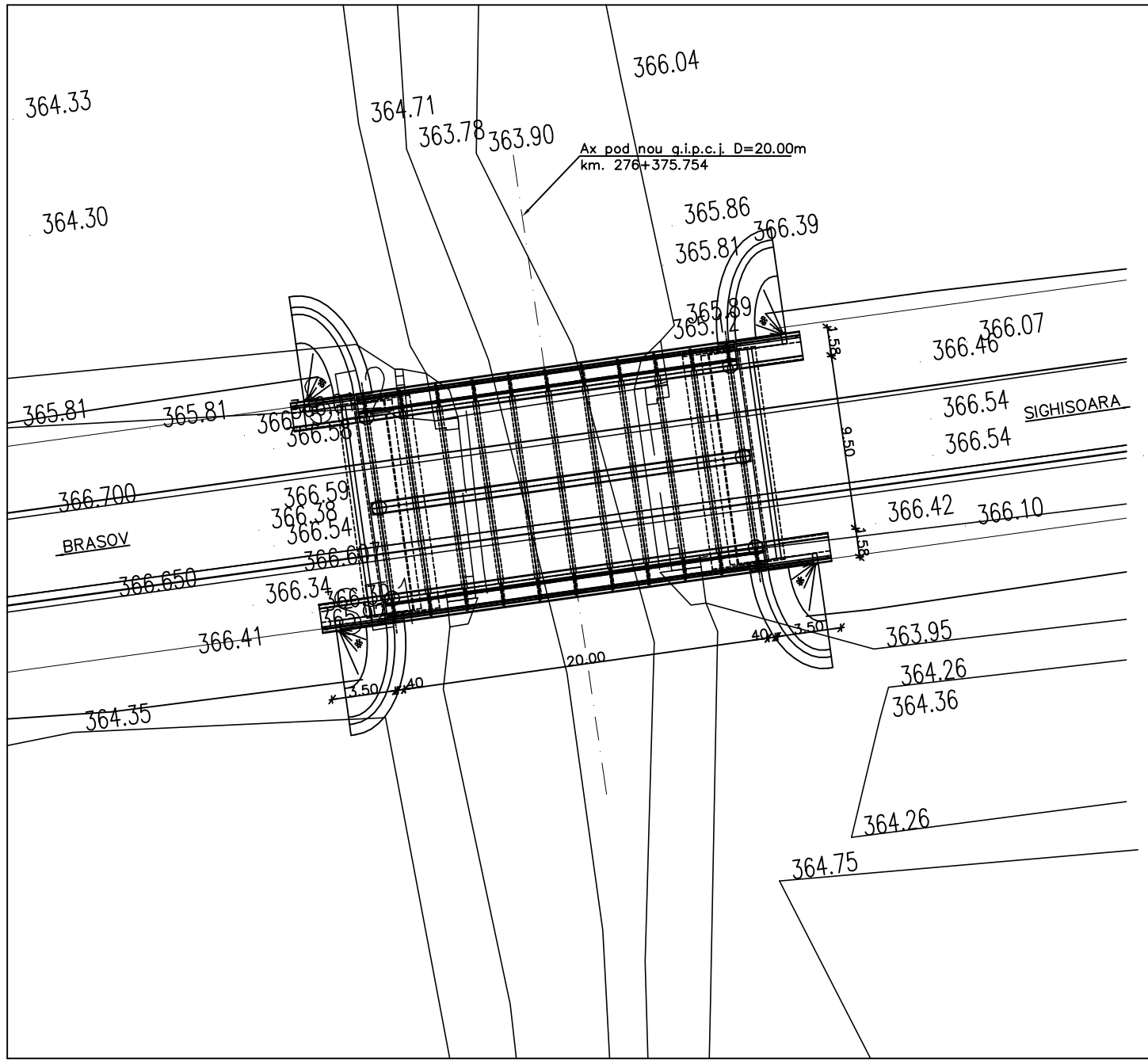

N O T A

1. Prezentul plan s–a intocmit pe baza urmatoarelor date:
– profil in lung;
– profil transversal;
– fisa podului;
– calcul hidraulic;
– date culese pe teren.
2. Podul corespunde la convoaiele de calcul UIC (LM71 si SW/2).
3. Noul pod are urmatoarea alcatuire:
– suprastructura: tablier cale dubla alcatuit din g.i.p.c.j, cu calea pe balast, L=20,00m
– infrastructura: culei din beton armat, fundate direct.
4. La executie se vor respecta cu strictete prevederile din "Normativ pentru producerea betonului", indicativ NE 012/1–2007 si "Normativ pentru producerea betonului si executarea lucrarilor din beton, beton armat si beton precomprimat. Partea 2: Executarea lucrarilor din beton", indicativ NE 012/2–2010, iar verificarea calitatii lucrarilor si receptionarea lor se va face conform normativului C56–1985.
– La proiect sunt atasate instructiunile pentru urmarirea curenta a comportarii in timp si Programul privind controlul calitatii lucrarilor.
5. Daca la executie se vor constata neconcordante intre situatia existenta pe teren si cea din proiect se va anunta proiectantul.
6. Constructia se incadreaza in categoria B de importanta. Constructii de importanta deosebita, modelul 1 de asigurare a calitatii conform HG 766/97.
7. Proiectul va fi verificat la exigentele A4.2; B2.2; D2.2

N O T E

1. This plan has been drawn up based on the following data:
– Longitudinal Profile;
– Cross–section Profile;
– Bridge's file;
– Hydraulic determination;
– Field Data.
2. Bridge convoys calculation corresponds to UIC (LM71 and SW/2).
3. The new bridge has the following structure:
– Superstructure: deck for double track, plain deck beams, bottom track, with track on ballast, L=20,00m;
– Infrastructure: abutments and reinforced concrete, with direct foundation.
4. The execution will strictly comply with the provisions of "Practice code for concrete production NE 012/1–2007 and "Practice code for the concrete production and works execution, reinforced and pre–stressed concrete –Part 2: The execution of concrete works."NE 012/2–2010, and the quality and the reception of the works shall be made accordingly to Norm C 56–1985.
5. In case during the execution there will be found out any discrepancies between the existing situation on site and in project, the designer will be anounced.
6. The construction is classified in the B category of importance. Special importance constructions, model 1 for quality ensuring according to HG 766/97.
7. The project will be checked to comply with the requirements A4.2; B2.2; D2.2.

DATE HIDRAULICE		HIDRAULIC DATA	
Inaltimea de apa	h=0.99m	Hidraulic height	h=0.99m
Perimetrul udat	P=11.82m	Perimeter	P=11.82m
Aria udata	A=9.94mp	Surface	A=9.94sqm
Vapa de curgere a apei	5.0m/s	Vater flow speed	s=5.0m/s

This drawing is forbidden to be copied, lent or used in other purposes than those previously approved by AREX *Lider* Company as its owner.
Se interzice copierea, difuzarea, imprumutarea sau utilizarea in alte scopuri, fara permisiunea AREX *Lider* Company ca proprietar al desenului.

Indice Index	Data Date	Modificare Modification/Revision	Proiectant Designer	Aprobat Consultant Approved Consultant	Aprobat CFR Approved CFR
D					
C					
B					
A	12.2011	Revizia 1 1 Revision	Secu Andrei Razvan		

GUVERNUL ROMANIEI
ROMANIAN GOVERNMENT

PROIECT FINANȚAT DE UNIUNEA EUROPEANĂ
EUROPEAN UNION FINANCED PROJECT

CLIENT / CLIENT

C.N.C.F. "C.F.R." - S.A.

ITALFERR GRUPPO FERROVIE DELLO STATO *Joint Venture leader*
Scott Wilson
OBERMEYER PLANEN + BERATEN GmbH
TECNIC Consulting Engineers

CONSULTANT / CONSULTANT

			Data Date	Semnătură Signature
Aprobat Approved	Şef proiect Project manager	R. Liuzza		
Aprobat Approved	Coordonator Secţiune 1 Section 1 Coordinator	C. Gambelli		
Verificat Checked	Expert Cheie Checking Expert	V.Kallidromitis		

SUBCONTRACTANT / SUBCONTRACTOR

AREX COMPANY

Aprobat Approved	Responsabil Subconsultant Subconsultant Responsible	A. Dinulescu Stanciu	09.2011	
Intocmit Elaborated	Proiectant Designer	Andrei Costan	09.2011	

Reabilitarea liniei de cale ferata Braşov - Simeria, parte componentă a coridorului IV Pan European, pentru circulaţia trenurilor cu viteza maximă de 160 km/h,
Tronsonul : Braşov - Sighişoara
Rehabilitation of the railway line Braşov - Simeria, component Part of the IV Pan-European Corridor, for the trains circulation with maximum speed of 160 km/h,
Section : Braşov - Sighişoara

Proiect/Project
2004/RO/16/P/PA/003

Faza / Phase:
P.Th. / T.D.

Denumire desen / Drawing Title : **Statia Albesti**

Pod Km 276+375.754 - D=20.00m - PLAN DE SITUATIE
Bridge Km 276+375.754 - D=20,00m - LAYOUT PLAN

Codificare / Codification System	Scara / Scale	LOT / LOT	Nr. / No
EA51 01 C 19 L8 PV 04 3 0 001 1	1:200		01 / 01

675X297