SECTIUNE LONGITUDINALA A–A
A–A LONGITUDINAL SECTION

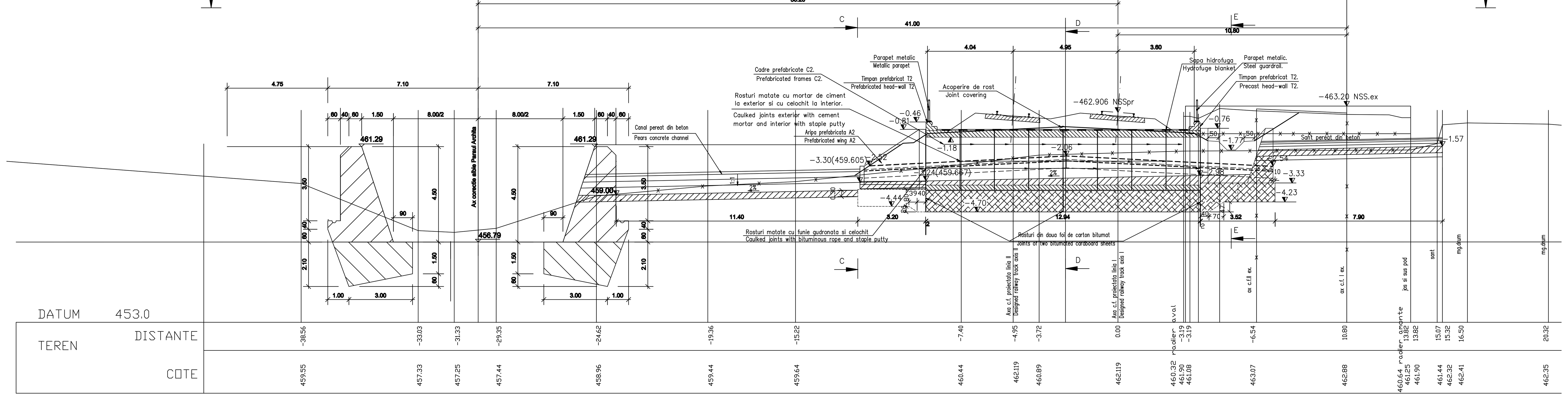

SECTIUNE TRANSVERSALA C–C
C–C CROSS SECTION

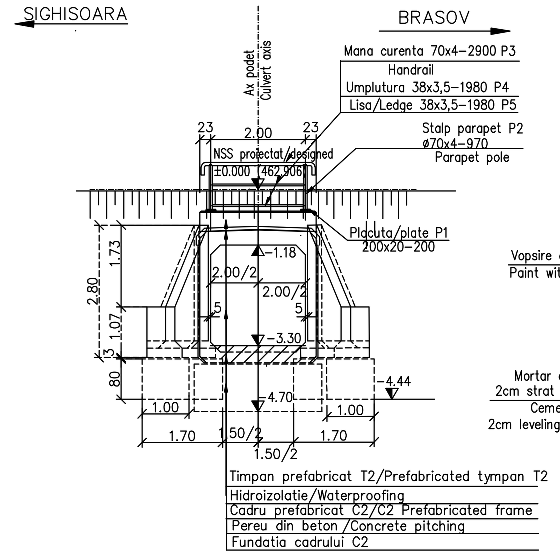

SECTIUNE TRANSVERSALA D–D
D–D CROSS SECTION

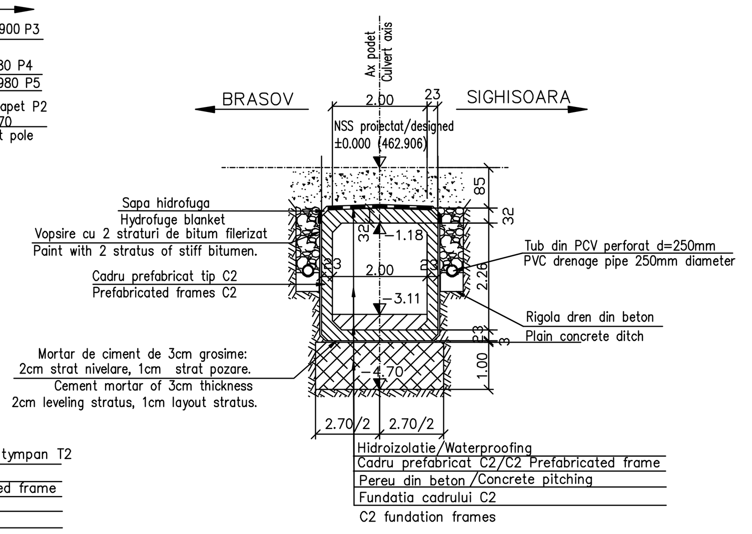

SECTIUNE TRANSVERSALA E–E
E–E CROSS SECTION

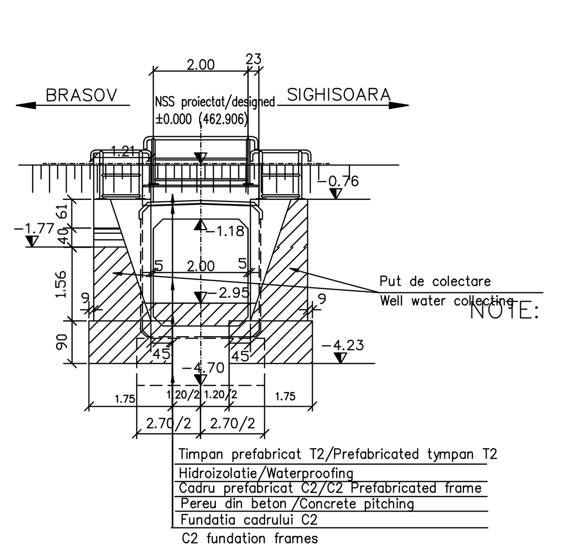

NOTA:

1. Prezentul plan s–a intocmit pe baza urmatoarelor date:
–plan de situatie;profil in lung; profil transversal;fisa podului; calcul hidraulic;date culese pe teren.2. Podetul corespunde la convoaiele de calcul UIC (LM71 si SW/2)
3. La executie se vor respecta cu strictete prevederile din "Normativ pentru producerea betonului si executarea lucrarilor din beton, beton armat si beton precomprimat. Partea 1: Producerea betonului", indicativ NE 012/1–2007 si "Normativ pentru producerea betonului si executarea lucrarilor din beton, beton armat si beton precomprimat. Partea 2: Executarea lucrarilor din beton", indicativ NE 012/2–2010, iar verificarea calitatii lucrarilor si receptionarea lor se va face conform normativului C56–1985.
4. Daca la executie se vor constata neconcordante intre situatia existenta pe teren si cea din proiect se va anunta proiectantul.
5. Constructia se incadreaza in categoria de importanta B (constructii de importanta deosebita), modelul 1 de asigurare a calitatii si clasa de importanta B, conform HG 766/1997.
6. Proiectul va fi verificat la exigentele A4.2; B2.2; D2.2.
7. Se atrage in mod deosebit atentia asupra obligativitatii rezemarii elevatiilor prefabricate pe blocul de fundatie prin intermediul unui strat de mortar de ciment pentru a se realiza un contact perfect pe toata suprafata intre talpa prefabricatului si fundatie. Se interzice rezemarea directa fara strat de moratar de ciment.

NOTE:

1. This plan has been drawn up based on the following data:
–Lay–out Plan;Longitudinal Profile;Cross–section; Profile–Bridge's File Hydraulic determination;Field Data.
2. The culvert corresponds to the UIC determination convoys (LM71 and SW/2).
3. The execution will strictly comply with the provisions of "Practice code for the concrete production and works execution, reinforced and pre–stressed concrete – Part 1: Practice code for concrete production" NE 012/1–2007 and "Practice code for the concrete production and works execution, reinforced and pre–stressed concrete – Part 2: The execution of concrete works." NE 012/2–2010, and the quality and the reception of the works shall be made accordingly to Norm C 56–1985.
4. If during the execution, discrepancies are found between the existing situation on site and the situation stated in the project, the designer will be noticed.
5. The construction has been classified in B category of importance (high important constructions), model 1–ensuring the quality and class of importance B according to G.O. 766/97.
6. The project will be checked in order to comply with the A4.2; B2.2; D2.2 requirements.
7. Particular attention is drawn on binding prefabricated elevations settlement on block foundation through a layer of cement mortar to achieve a perfect contact over the entire surface between precast and foundation base.Propping is prohibited without direct layer of cement mortar.

DETALIU PENTRU PRINDEREA PLACUTELOR P1 DE TIMPAN
DETAIL TO JOIN THE SLABS P1 AT THE TYMPANUM

VEDERE IN PLAN 1-1
1-1 VIEW PLAN

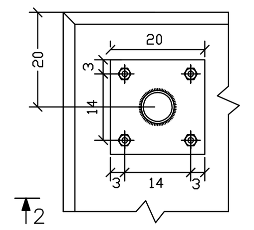

SECTIUNE 2-2
2-2 SECTION

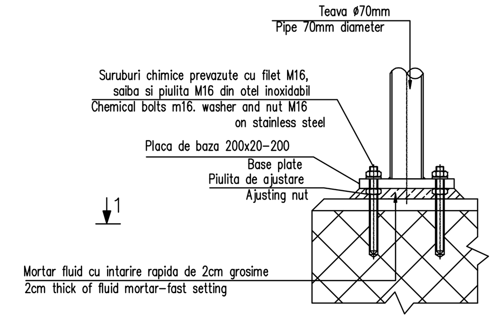

MATERIAL METALIC PENTRU CONFECTIONAREA PARAPETULUI PODETULUI
THE METALLIC MATERIAL TO BUILD PARAPET OF CULVERT

Poz. Piece	Denumirea materialului The denomination of the material OL EN 10025 – S235 JR	Buc.	Sectiune Section	Lung. Long. (mm)	Sectiune/Section kg/ml	kg/buc	kg
P1	Placuta prindere Clamping plate	4	200x20	200	31.40	6.28	25.12
P2	Stalp parapet EN 10297 – E275 Parapet pole	4	70x4	970	6.51	6.32	25.26
P3	Mana curenta EN 10297 – E275 Handrail	2	70x4	2900	6.51	18.88	37.76
P4	Umplutura EN 10058 Filling	2	38x3,5	1980	2.98	5.90	11.80
P5	Lisa EN 10058 Ledge	2	38x3,5	1980	2.98	5.90	11.80
Total partial Partially total							111.74
Sudura 2% Welding 2%							2.24
TOTAL kg							115

MATERIAL METALIC PENTRU CONFECTIONAREA PARAPETULUI TIMPANULUI
THE METALLIC MATERIAL TO BUILD PARAPET OF TYMPAN

Piesa Piece	Denumirea materialului The denomination of the material OL EN 10025 – S235 JR	Buc.	Sectiune Section	Lung. Long. (mm)	Sectiune/Section kg/ml	kg/buc	kg
P1'	Placuta prindere Clamping plate	4	200x20	200	31.40	6.28	25.12
P2'	Stalp parapet EN 10297 – E275 Parapet pole	4	70x4	970	6.51	6.32	25.26
P3'	Mana curenta EN 10297 – E275 Handrail	2	70x4	1600	6.51	10.4	21.00
P4'	Umplutura EN 10058 Filling	2	38x3,5	800	2.98	2.4	4.80
P5'	Lisa EN 10058 Ledge	2	38x3,5	800	2.98	2.4	4.80
Total partial Partially total							80.98
Sudura 2% Welding 2%							1.62
TOTAL kg							83.00

DATE HIDRAULICE:
- –Inaltimea de apa: h=0,58m
- –Perimetrul udat: P=3.16m
- –Aria udata: A=1.16m²
- –Viteza de curgere a apei V=2.38m/s

HIDRAULIC DATA:
- –Hydraulic height: h=0.58m
- –Perimeter: P=3.16m
- –surface: A=1.16m²
- –Water flow speed: V=2.38m/s

NOTA
Numar de elemente prefabricate
- –Cadre C2 : 8buc
- –Aripi prefabricate A2. 2buc.

NOTE
Number of precast section
- –Prefabricated frames C2 8pcs.
- –Prefabricated wings A2 4pcs.

SECTIUNE TRANSVERSALA G–G
G–G CROSS SECTION

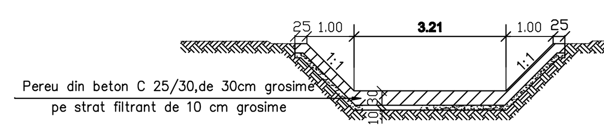

LEGENDA BETOANELOR
CONCRETE LIST

- Beton in elementele prefabricate / Prefabricated concrete elements / C35/45–CEM II/A–S32,5–(XC4+XF3+XA1)–A/C=0,50–Dmax22–Cl0.20
- Beton in fundatia podetelor, a elementelor de racordare, in pereu / Concrete in the foundation culverts, connecting elements, in pitching / C25/30–CEM II/A–S 32,5–(XF1)–A/C=0,50–Dmax32–Cl0.20
- Beton in rigola drenurilor, fundatiile sferturilor de con si pentru realizarea stratului suport pentru pereu / Plain concrete gutter drains, foundations quartering cone and to carry out substrate for pitching / C25/30–CEM II/A–S 32,5–(XC4+XF3+XA1)–A/C=0,50–Dmax32–Cl0.20

VEDERE IN PLAN B – B
B –B PLAN VIEW

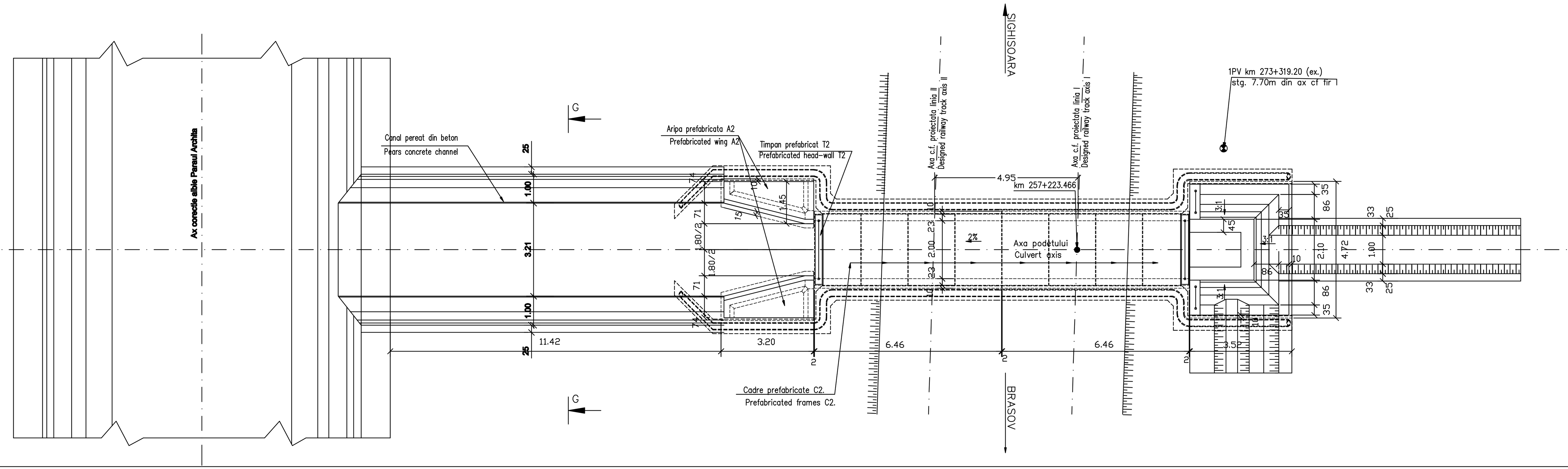

PLAN FUNDATII F – F
F – F FOUNDATIONS PLAN

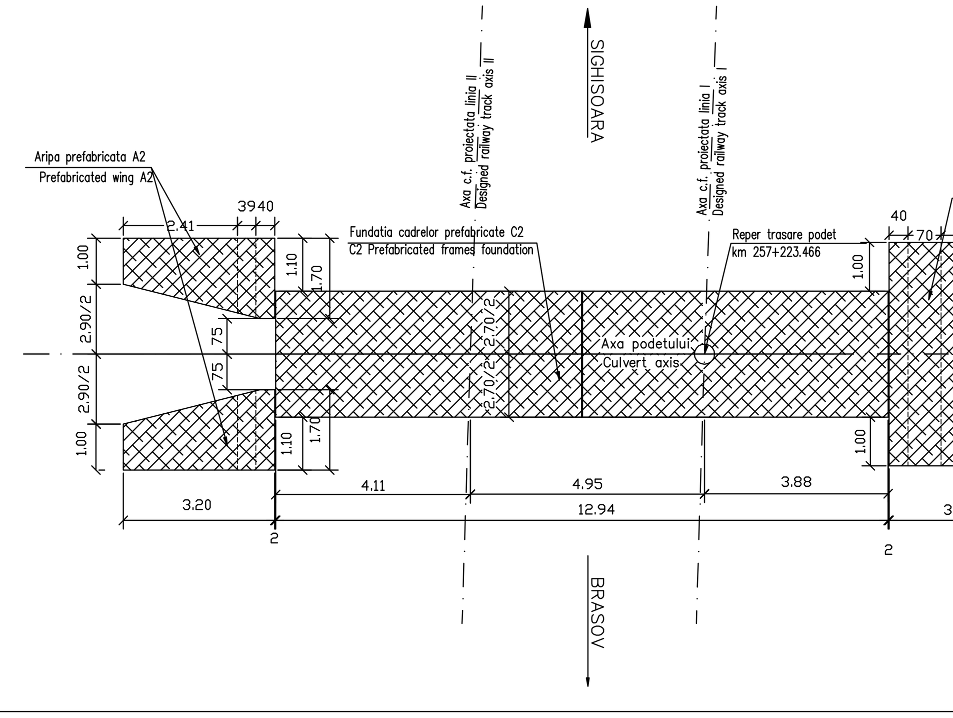

This drawing is forbidden to be copied, lent or used in other purposes than those previously approved by AREX *Lider* Company as its owner.
Se interzice copierea, difuzarea, imprumutarea sau utilizarea in alte scopuri, fara permisiunea AREX *Lider* Company ca proprietar al desenului.

Indice Index	Data Date	Modificare Modification/Revision	Proiectant Designer	Aprobat Consultant Approved Consultant	Aprobat CFR Approved CFR
D					
C					
B					
A	12.2011	Revizia 1	Ionela Ungureanu		

GUVERNUL ROMANIEI / ROMANIAN GOVERNMENT
PROIECT FINANȚAT DE UNIUNEA EUROPEANĂ / EUROPEAN UNION FINANCED PROJECT

CLIENT / CLIENT: C.N.C.F. "C.F.R." - S.A.

ITALFERR GRUPPO FERROVIE DELLO STATO Joint Venture leader — Scott Wilson — OBERMEYER PLANEN + BERATEN GmbH — TECNIC Consulting Engineers

CONSULTANT / CONSULTANT

			Data Date	Semnătură Signature
Aprobat Approved	Şef proiect Project manager	R. Liuzza		
Aprobat Approved	Coordonator Secţiune 1 Section 1 Coordinator	C. Gambelli		
Verificat Checked	Expert Cheie Checking Expert	V.Kallidromitis		

SUBCONTRACTANT / SUBCONTRACTOR — AREX

Aprobat Approved	Responsabil Subconsultant Subconsultant Responsible	A. Dinulescu Stanciu	07.2011	
Întocmit Elaborated	Proiectant Designer	Ionela Ungureanu	07.2011	

Reabilitarea liniei de cale ferata Braşov - Simeria, parte componentă a coridorului IV Pan European, pentru circulaţia trenurilor cu viteza maximă de 160 km/h,
Tronsonul : Braşov - Sighişoara
Rehabilitation of the railway line Braşov - Simeria, component Part of the IV Pan-European Corridor, for the trains circulation with maximum speed of 160 km/h,
Section : Braşov - Sighişoara

Proiect/Project: 2004/RO/16/P/PA/003
Faza / Phase: P.Th. / T.D.

Denumire desen / Drawing Title :
STATIA ARCHITA / ARCHITA STATION
PODET - KM 257+223.466 / KM 257+223.466 - CULVERT
DISPOZITIE GENERALA / GENERAL DISPOSITION

Codificare / Codification System	Scara / Scale	LOT / LOT	Nr. / No
EA51 01 C 15 PA PO 06 7 1 002 1	1:100		01 / 01