DATE HIDRAULICE:

-Inaltimea de apa: h=1,96m
-Perimetrul udat: P=7,92m
-Aria udata: A=7,84m²
-Viteza de curgere a apei V=4,39m/s

HIDRAULIC DATA:

-Hydraulic height: h=1,96m
-Perimeter: P=7,92m
-surface: A=7,84m²
-Water flow speed: V=4,39m/s

NOTA

Numar de elemente prefabricate
-Dale curente D4: 12buc
-Dale marginale D4: 2buc
-Elevatii L1: 14buc.
-Aripi prefabricate A3. 2buc.
-Timpane prefabricate 2buc

NOTE

Number of precast section
-Standard slab D4 12pcs.
-Edge slab D4: 2pcs.
-L1 elevations: 14pcs.
-Precast wingwall A3. 2pcs.
-Head-wall 2pcs.

DTALIUL „B" SISTEM DE DRENARE A APELOR DIN SPATELE CULEELOR
„B" DETAIL SYSTEM FOR DRAINAGE THE WATER FROM BEHIND ABUTMENTS

Sc 1:20

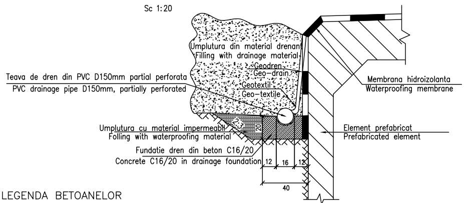

Umplutura din material drenant
Filling with drainage material
Geodren
Geo-drain
Geotextil
Geo-textile
Teava de dren din PVC D150mm partial perforata
PVC drainage pipe D150mm, partially perforated
Membrana hidroizolanta
Waterproofing membrane
Umplutura cu material impermeabil
Folling with waterproofing material
Element prefabricat
Prefabricated element
Fundatie dren din beton C16/20
Concrete C16/20 in drainage foundation
3%
20
12
16
12
40

LEGENDA BETOANELOR
CONCRETE LIST

▨ -Beton în elemente prefabricate în general (cadre, aripi, timpane,):
-Concrete for prefabricated elements generally (frames,wings, tympana,
C35/45 ï CEM II/A ï S32,5 ï (XC4+XF3+XA1) ï A/C=0,50 ï Dmax22 ï Cl 0,20

▧ -Beton in fundatia podetelor, a elementelor de racordare (aripi, pinteni), in pereu
-Concrete for the foundations of culverts, of connecting elements(wings, breakwaters), in pitching
C25/30-CEM II/A-S 32,5-(XF1)-A/C=0,50-Dmax32-Cl0.20

▨ -Beton în rigola drenurilor, fundatiile sferturilor de con si pentru realizarea stratului suport pentru pereu:
-Concrete for the drain gutters, for the foundations of cone quarters and for the support layer of revetment:
C25/30 ï CEM II/A ï S 32,5 ï (XC4+XF3+XA1) ï A/C = 0,50 ï Dmax32 ï Cl 0,20

▩ -Beton în stratul de protectie a hidroizolatiei:
-Concrete for the waterproofing protection layer:
C25/30 ï CEM II/A ï S 32,5 ï (XC4+XF3) ï A/C = 0,50 ï Dmax16 ï Cl 0,20

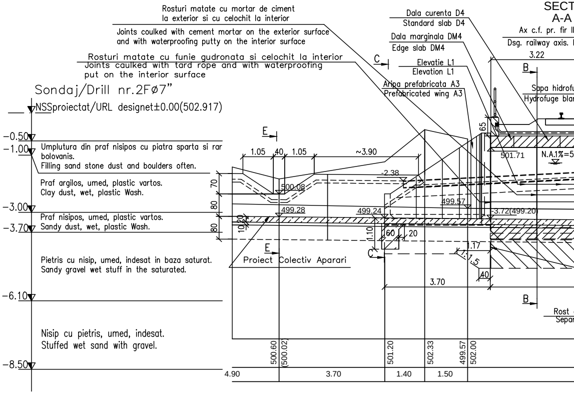

SECT
A-A
Rosturi matate cu mortar de ciment
la exterior si cu celochit la interior
Joints coulked with cement mortar on the exterior surface
and with waterproofing putty on the interior surface
Rosturi matate cu funie gudronata si celochit la interior
Joints caulked with tard rope and with waterproofing
put on the interior surface
Dala curenta D4
Standard slab D4
Dala marginala DM4
Edge slab DM4
Elevatie L1
Elevation L1
Aripa prefabricata A3
Prefabricated wing A3
Ax c.f. pr. fir I
Dsg. railway axis.
3.22
Sapa hidrofu
Hydrofuge blan
Sondaj/Drill nr.2Fø7"
NSSproiectat/URL designet±0.00(502.917)
-0.50
-1.00
Umplutura din praf nisipos cu piatra sparta si rar bolovanis.
Filling sand stone dust and boulders often.
Praf argilos, umed, plastic vartos.
Clay dust, wet, plastic Wash.
-3.00
Praf nisipos, umed, plastic vartos.
Sandy dust, wet, plastic Wash.
-3.70
Pietris cu nisip, umed, indesat in baza saturat.
Sandy gravel wet stuff in the saturated.
-6.10
Nisip cu pietris, umed, indesat.
Stuffed wet sand with gravel.
-8.50
E
1.05
40
1.05
~3.90
70
80
80
10
20
-2.38
500.08
499.28
499.24
499.57
-3.72(499.20)
501.71
N.A.1%=5
65
1.10
60
20
1.17
1:1.5
40
3.70
Proiect Colectiv Aparari
C
B
Rost
Separ
500.60
(500.02)
501.20
502.33
499.57
502.00
4.90
3.70
1.40
1.50

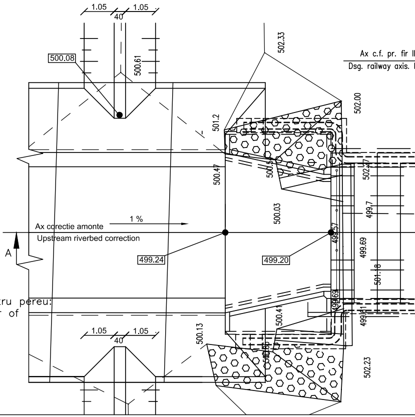

1.05
40
1.05
500.08
500.61
502.33
Ax c.f. pr. fir I
Dsg. railway axis.
502.00
501.2
500.47
502.27
500.03
499.7
Ax corectie amonte
Upstream riverbed correction
1 %
A
499.24
499.20
499.57
499.69
501.8
500.41
499.69
499.41
500.13
500.58
502.23

TIUNE LONGITUDINALA A-A
LONGITUDINAL SECTION

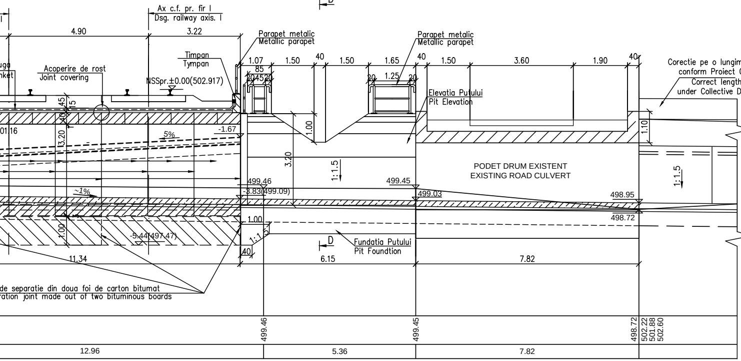
D
Ax c.f. pr. fir I
Dsg. railway axis. I
4.90
3.22
Parapet metalic
Metallic parapet
Parapet metalic
Metallic parapet
Timpan
Tympan
uga
nket
Acoperire de rost
Joint covering
NSSpr.±0.00(502.917)
1.07
85
20 45 20
1.50
40
1.50
1.65
20
1.25
20
40
1.50
3.60
1.90
40
Corectie pe o lungime de ~35.00m
conform Proiect Colectiv Aparari
Correct length of ~ 35.00m
under Collective Defense Project
Elevatia Putului
Pit Elevation
45
15
40
01.16
3.20
5%
-1.67
1.00
3.20
1:1.5
1.10
PODET DRUM EXISTENT
EXISTING ROAD CULVERT
1:1.5
499.46
-3.83(499.09)
499.45
499.03
498.95
~1%
498.72
1.00
1.00
-5.44(497.47)
1.00
1:1.5
D
Fundatia Putului
Pit Foundtion
40
11.34
6.15
7.82
de separatie din doua foi de carton bitumat
ration joint made out of two bituminous boards
499.46
499.45
498.72
502.22
501.88
502.60
12.96
5.36
7.82

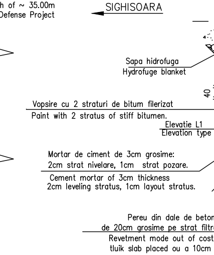
SIGHISOARA
Sapa hidrofuga
Hydrofuge blanket
40
Vopsire cu 2 straturi de bitum filerizat
Paint with 2 stratus of stiff bitumen.
Elevatie L1
Elevation type
Mortar de ciment de 3cm grosime:
2cm strat nivelare, 1cm strat pozare.
Cement mortar of 3cm thickness
2cm leveling stratus, 1cm layout stratus.
Pereu din dale de beton
de 20cm grosime pe strat filtr
Revetment mode out of cost
tluik slab placed ou a 10cm

VEDERE PLANA
PLAN VIEW

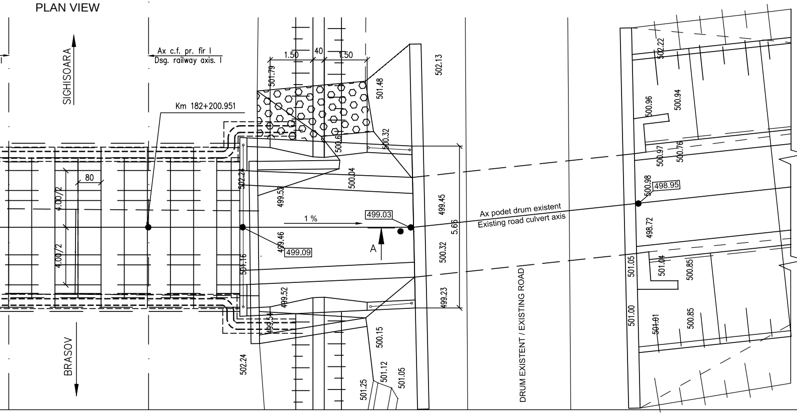
SIGHISOARA
BRASOV
Ax c.f. pr. fir I
Dsg. railway axis. I
Km 182+200.951
80
4.00/2
4.00/2
1.50
40
1.50
501.79
501.48
502.13
500.6
500.32
502.24
500.04
499.52
1 %
499.03
499.46
499.09
A
499.45
5.66
500.32
499.23
501.16
499.52
499.54
500.15
501.12
501.05
501.25
502.24
Ax podet drum existent
Existing road culvert axis
DRUM EXISTENT / EXISTING ROAD
502.22
500.96
500.94
500.97
500.76
500.98
498.95
498.72
501.05
501.04
500.85
501.00
501.01
500.85

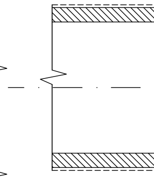

SECTIUNE B-B
B-B SECTION

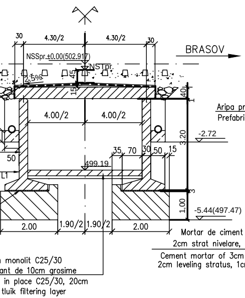
30
4.30/2
4.30/2
30
NSSpr.±0.00(502.917)
NSTpr.
BRASOV
2.5%
45
15
40
4.00/2
4.00/2
3.20
-2.72
50
499.19
35
70
30
50
15
L1
3
1.00
-5.44(497.47)
2.00
1.90/2
1.90/2
2.00
monolit C25/30
ant de 10cm grosime
in place C25/30, 20cm
tluik filtering layer

SECTIUNE C-C
C-C SECTION

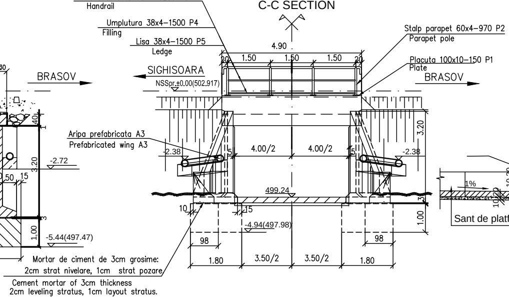
Mana curenta 60x4–3250 P3
Handrail
Umplutura 38x4–1500 P4
Filling
Lisa 38x4–1500 P5
Ledge
Stalp parapet 60x4–970 P2
Parapet pole
Placuta 100x10–150 P1
Plate
4.90
20
1.50
1.50
1.50
20
SIGHISOARA
BRASOV
NSSpr.±0.00(502.917)
Aripa prefabricata A3
Prefabricated wing A3
-2.38
5
4.00/2
4.00/2
5
-2.38
3.20
499.24
10
15
-4.94(497.98)
3
1.00
98
98
1.80
3.50/2
3.50/2
1.80
Mortar de ciment de 3cm grosime:
2cm strat nivelare, 1cm strat pozare
Cement mortar of 3cm thickness
2cm leveling stratus, 1cm layout stratus.

SECTIUNE E-E CORECTIE AMONTE
E-E CORRECTION SECTION UPSTREAM

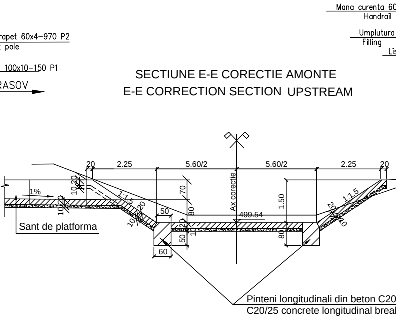
Mana curenta 60
Handrail
Umplutura
Filling
Lis
20
2.25
5.60/2
5.60/2
2.25
20
Ax corectie
1%
10
20
10
20
1:1.5
20
10
70
50
80
20
10
50
499.54
1.50
80
60
1:1.5
20
10
Sant de platforma
Pinteni longitudinali din beton C20
C20/25 concrete longitudinal breal

PLANUL FUNDATIILOR
FUNDATION PLAN

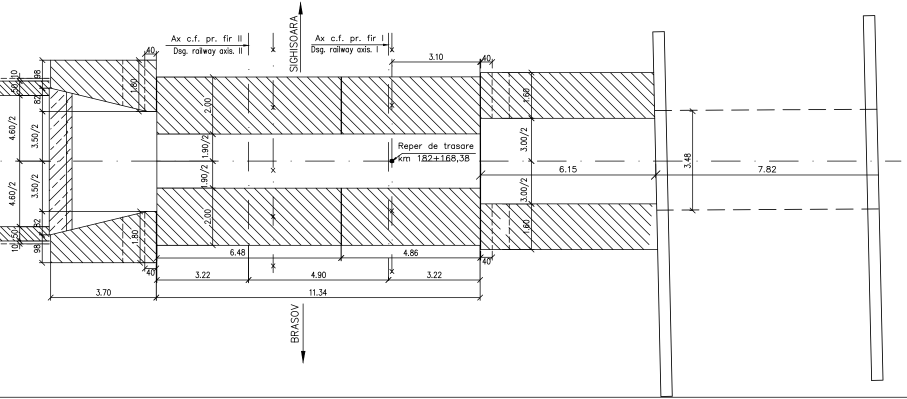
SIGHISOARA
Ax c.f. pr. fir II
Dsg. railway axis. II
Ax c.f. pr. fir I
Dsg. railway axis. I
40
3.10
40
10
50
98
82
1.80
2.00
1.60
4.60/2
3.50/2
1.90/2
Reper de trasare
km 182+168,38
3.00/2
3.48
6.15
7.82
4.60/2
3.50/2
1.90/2
3.00/2
2.00
1.80
1.60
82
50
10
98
6.48
4.86
40
40
3.22
4.90
3.22
3.70
11.34
BRASOV

SECTIUNE D-D
D-D SECTION

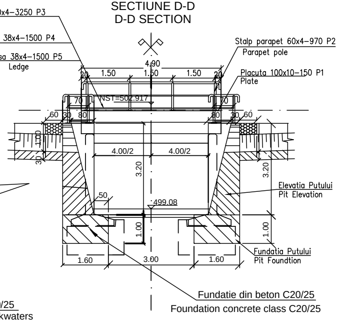
x4-3250 P3
38x4-1500 P4
sa 38x4-1500 P5
Ledge
Stalp parapet 60x4-970 P2
Parapet pole
4.90
20
1.50
1.50
1.50
20
Placuta 100x10-150 P1
Plate
70
NST=502.917
70
60
30
80
80
30
60
1.00
30
4.00/2
4.00/2
3.20
3.20
Elevatia Putului
Pit Elevation
50
499.08
1.00
1.00
Fundatia Putului
Pit Foundtion
1.60
3.00
1.60
Fundatie din beton C20/25
Foundation concrete class C20/25
/25
kwaters

SECTIUNE 2-2
2-2 SECTION

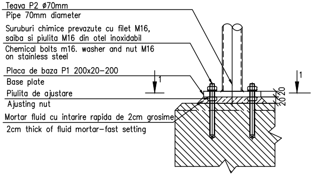
Teava P2 ϕ70mm
Pipe 70mm diameter
Suruburi chimice prevazute cu filet M16, saiba si piulita M16 din otel inoxidabil
Chemical bolts m16. washer and nut M16 on stainless steel
Placa de baza P1 200x20-200
Base plate
Piulita de ajustare
Ajusting nut
Mortar fluid cu intarire rapida de 2cm grosime
2cm thick of fluid mortar-fast setting
1
1
20
20

VEDERE IN PLAN 1-1
1-1 VIEW PLAN

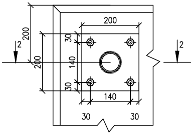
200
200
200
30
140
30
140
30
30
2
2

DTALIUL ,,A" FUNDATII INDEPENDENTE
,,A" DETAIL INDEPENDENT FOUNDATIONS

Sc 1:50

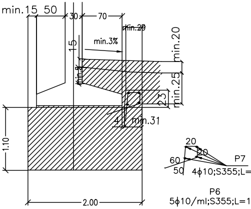
min.15
50
30
70
min.20
15
min.3%
min.20
min.5
min.25
23
4
min.31
1.10
2.00
20
20
60
50
P7
4ϕ10;S355;L=
P6
5ϕ10/ml;S355;L=1

MATERIAL METALIC PENTRU CONFECTIONAREA PARAPETULUI PODETULUI
THE METALLIC MATERIAL TO BUILD PARAPET OF CULVERT

Poz. Piece	Denumirea materialului The denomination of the material OL EN 10025 – S235 JR	Buc.	Sectiune Section	Lung. Long. (mm)	Sectiune/Section		
					kg/ml	kg/buc	kg
P1	Placuta prindere Clamping plate	8	200x20	200	31.40	6.28	50.24
P2	Stalp parapet EN 10297 – E275 Parapet pole	8	70x4	970	6.51	6.32	50.56
P3	Mana curenta EN 10297 – E275 Handrail	2	70x4	5700	6.51	37.11	74.21
P4	Umplutura EN 10058 Filling	6	38x3,5	1500	2.98	4.47	26.82
P5	Lisa EN 10058 Ledge	6	38x3,5	1500	2.98	4.47	26.82
Total partial Partially total							228.65
Sudura 2% Welding 2%							4.57
TOTAL kg							234

MATERIAL METALIC PENTRU CONFECTIONAREA PARAPETULUI PUTULUI
THE METALLIC MATERIAL TO BUILD PARAPET OF THE PIT

Poz. Piece	Denumirea materialului The denomination of the material OL EN 10025 – S235 JR	Buc.	Sectiune Section	Lung. Long. (mm)	Sectiune/Section		
					kg/ml	kg/buc	kg
P1	Placuta prindere Clamping plate	12	200x20	200	31.40	6.28	75.36
P2	Stalp parapet EN 10297 – E275 Parapet pole	12	70x4	970	6.51	6.32	75.84
P3	Mana curenta EN 10297 – E275 Handrail	1	70x4	10200	6.51	66.40	66.40
P4	Umplutura EN 10058 Filling	1	38x3,5	4800	2.98	14.30	14.30
P5	Lisa EN 10058 Ledge	1	38x3,5	4800	2.98	14.30	14.30
Total partial Partially total							246.20
Sudura 2% Welding 2%							4.92
TOTAL kg							252

Extras armatura / Statement reinforcing

P6	Armatura Reinforced steel	57	ϕ10	1650	0.617	1.018	58.03
P7	Armatura Reinforced steel	8	ϕ10	6520	0.617	4.022	32.176
Total partial Partially total							90.20
Sudura 2% Welding 2%							1.80
TOTAL kg							92.00

NOTA:

1. Prezentul plan s-a intocmit pe baza urmatoarelor date:
-plan de situatie
-profil in lung
-profil transversal
-fisa podului
-calcul hidraulic
-date culese pe teren

2. Podetul corespunde la convoaiele de calcul UIC (LM71 si SW/2)

3. La executie se vor respecta cu strictete prevederile din "Normativ pentru producerea betonului si executarea lucrarilor din beton, beton armat si beton precomprimat. Partea 1: Producerea betonului", indicativ NE 012/1-2007 si "Normativ pentru producerea betonului si executarea lucrarilor din beton, beton armat si beton precomprimat. Partea 2: Executarea lucrarilor din beton", indicativ NE 012/2-2010, iar verificarea calitatii lucrarilor si receptionarea lor se va face conform normativului C56-1985.

4. Daca la executie se vor constata neconcordante intre situatia existenta pe teren si cea din proiect se va anunta proiectantul.

6.52m

5. Constructia se incadreaza in categoria de importanta B (constructii de importanta deosebita), modelul 1 de asigurare a calitatii si clasa de importanta B, conform HG 766/1997.

.65m

6. Proiectul va fi verificat la exigentele A4.2; B2.2; D2.2.

7. Se atrage in mod deosebit atentia asupra obligativitatii rezemarii elevatiilor prefabricate pe blocul de fundatie prin intermediul unui strat de mortar de ciment pentru a se realiza un contact perfect pe toata suprafata intre talpa prefabricatului si fundatie. Se interzice rezemarea directa fara strat de moratar de ciment.

NOTE:

1. This plan has been drawn up based on the following data:
-Lay-out Plan
-Longitudinal Profile
-Cross-section Profile
-Bridge's File
-Hydraulic determination
-Field Data

2. The culvert corresponds to the UIC determination convoys (LM71 and SW/2).

3. The execution will strictly comply with the provisions of "Practice code for the concrete production and works execution, reinforced and pre-stressed concrete - Part 1: Practice code for concrete production" NE 012/1-2007 and "Practice code for the concrete production and works execution, reinforced and pre-stressed concrete - Part 2: The execution of concrete works." NE 012/2-2010, and the quality and the reception of the works shall be made accordingly to Norm C 56-1985.

4. If during the execution, discrepancies are found between the existing situation on site and the situation stated in the project, the designer will be noticed.

5. The construction has been classified in B category of importance (high important constructions), model 1-ensuring the quality and class of importance B according to G.O. 766/97.

6. The project will be checked in order to comply with the A4.2; B2.2; D2.2 requirements.

7. Particular attention is drawn on binding prefabricated elevations
settlement on block foundation through a layer of cement mortar
to achieve a perfect contact over the entire surface between precast and foundation base.Propping is prohibited without direct layer of cement mortar.

Se interzice copierea, difuzarea, imprumutarea sau utilizarea in alte scopuri, fara permisiunea AREX LIDER COMPANY ca proprietar al desenului.
This drawing is forbidden to be copied, lent or used in other purposes than those previously approved by AREX LIDER COMPANY as its owner.

D					
C					
B	11.2011	Revizia 2	Andreea Dinu		
A	02.2011	Revizia 1	Andreea Dinu		
Indice Index	Data Date	Modificare Modification/Revision	Proiectant Designer	Aprobat Consultant Approved Consultant	Aprobat CFR Approved CFR

GUVERNUL ROMANIEI
ROMANIAN GOVERNMENT

PROIECT FINANŢAT DE UNIUNEA EURO
EUROPEAN UNION FINANCED PR

C.N.C.F. "C.F.R." - S.A.

CLIENT / CLIENT

ITALFERR
GRUPPO FERROVIE DELLO STATO
Joint Venture leader

Scott Wilson

OBERMEYER
PLANEN + BERATEN GmbH

TECNIC
Consulting Engineers

CONSULTANT / CONSULTANT

			Data Date	SemnŁturŁ Signature
Aprobat Approved	ķef proiect Project manager	R. Liuzza		
Aprobat Approved	Coordonator SecŞune 1 Section 1 Coordinator	C. Gambelli		
Verificat Checked	Expert Cheie Checking Expert	V.Kallidromitis		

SUBCONTRACTANT / SUBCONTRACTOR

AREX COMPANY

Aprobat Approved	Responsabil Subconsultant Subconsultant Responsible	A. Dinulescu Stanciu	12.2010	
Ȯtocmit Elaborated	Proiectant Designer	Dinu Andreea	12.2010	

Reabilitarea liniei de cale ferata Brakov - Simeria, parte componentŁ a coridorului IV Pan European, pentru circulaŞa trenurilor cu viteza maximŁ de 160 km/h,
Tronsonul : Braşov - Sighişoara
Rehabilitation of the railway line Braşov - Simeria, component Part of the IV Pan-European Corridor, for the trains circulation with maximum speed of 160 km/h,
Section : Braşov - Sighişoara

Proiect/Project
2004/RO/16/P/PA/003

Faza / Phase:
P.Th. / T.D.

Denumire desen / Drawing Title :

STATIA BOD / STATION BOD
PODET KM 182+200.951 / CULVERT KM 182+200.951
DISPOZITIE GENERALA / GENERAL DISPOSITION

Codificare / Codification System	Scara / Scale 1:100	LOT / LOT	Nr. / No 01 / 01

E A 5 1 | 0 1 | C | 0 5 | P A | P O | 0 0 | 4 | 1 | 0 0 2 | 2