DATE HIDRAULICE:

-Inaltimea de apa: h=1.23m
-Perimetrul udat: P=4.46m
-Aria udata: A=2.46m
-Viteza de curgere a apei V=3.47m/s

HIDRAULIC DATA:

-Hydraulic height: h=1.23m
-Perimeter: P=4.46m
-surface: A=2.46m
-Water flow speed: V=3.47m/s

NOTA

Numar de elemente prefabricate

-Cadre prefabricate C2:	10buc
-Aripi prefabricate A2.	4buc.
-Timpane prefabricate	2buc

NOTE

Number of precast section

-Prefabricated frames C2	10pcs.
-Prefabricated wings A2	4pcs.
-Head-wall	2pcs.

SECTIUNE LONGITUDINALA A-

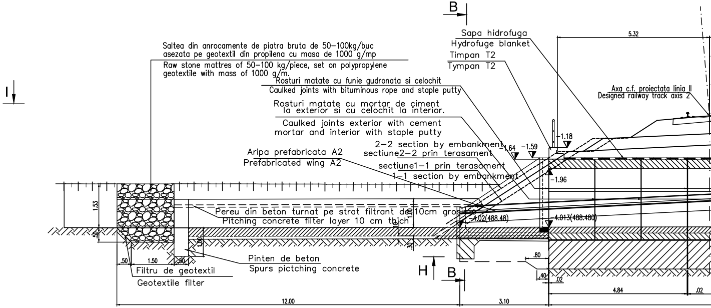
B
Sapa hidrofuga
Hydrofuge blanket
Timpan T2
Tympan T2
5.32
Saltea din anrocamente de piatra bruta de 50-100kg/buc
asezata pe geotextil din propilena cu masa de 1000 g/mp
Raw stone mattres of 50-100 kg/piece, set on polypropylene
geotextile with mass of 1000 g/m.
Rosturi matate cu funie gudronata si celochit
Caulked joints with bituminous rope and staple putty
Axa c.f. proiectata linia II
Designed railway track axis 2
Rosturi matate cu mortar de ciment
la exterior si cu celochit la interior.
Caulked joints exterior with cement
mortar and interior with staple putty
I
2-2 section by embankment
sectiune2-2 prin terasament
-1.64
-1.59
-1.18
Aripa prefabricata A2
Prefabricated wing A2
sectiune1-1 prin terasament
1-1 section by embankment
-1.96
1.53
Pereu din beton turnat pe strat filtrant de 10cm grosime
Pitching concrete filter layer 10 cm thich
-4.02(488.48)
-4.013(488.480)
.50
1.00
.10
.30
.50
1.50
.50
Filtru de geotextil
Geotextile filter
Pinten de beton
Spurs pictching concrete
H
B
.80
.40
.02
4.84
.02
12.00
3.10
-485.00

Nivel platforma proiectata Subgrade	488.504	488.499	488.480	488.480	488.469
Distanta Distance	25.149	22.649	13.149	10.029	4.410

VEDER

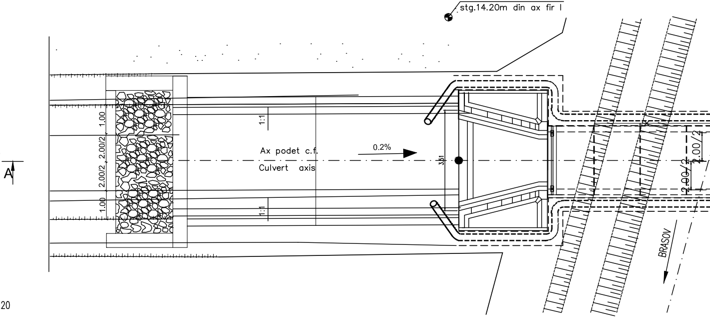
FE1-F7 km 188+374.30
stg.14.20m din ax fir I
1.00
2.00/2
2.00/2
1.00
1:1
1:1
Ax podet c.f.
Culvert axis
0.2%
3.51
2.00/2
2.00/2
BRASOV
A

LEGENDA BETOANELOR
CONCRETE LIST

▨	Beton armat in elementele prefabricate Reinforced concrete in the prefabricated elements C35/45-CEM II/A-S32,5(XC4+XF3+XA1)-A/C=0,50-Dmax 22-Cl 0.20
▨	Beton armat in corectia amonte Reinforced concrete in the downstream correction C25/30-CEM II/A-S 32,5-(XF3)-A/C=0.55-Dmax16- Cl 0.20
▨	Beton armat in elememntele prefabricate si aripi Plain concrete in the prefabricated elements and wings C25/30-CEM II/A-S 32,5-(XF1)-A/C=0,50-Dmax 32-Cl 0.20
▨	Beton simplu de panta in pinten si in rigola drenului Plain concrete slope and spur the gutter drain C 25/30-CEM II/A-S 32,5-(XC4+XF3+XA1)-A/C=0,50-Dmax32-Cl 0.20

–A / LONGITUDINAL SECTION A–A

Scara 1:100

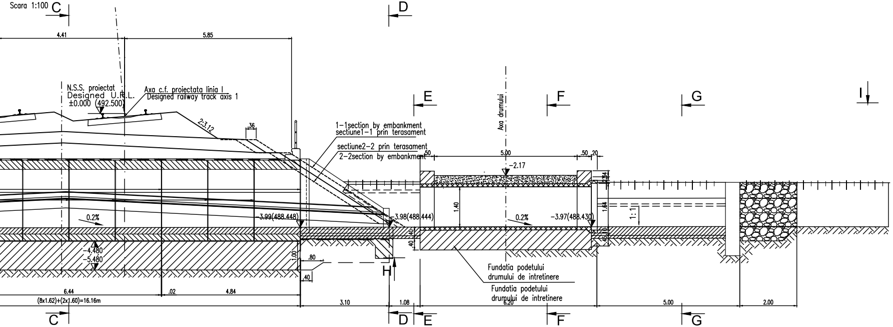
C
D
4.41
5.85
N.S.S. proiectat
Designed U.R.L.
±0.000 (492.500)
Axa c.f. proiectata linia I
Designed railway track axis 1
2:3.12
.36
E
Axa drumului
F
G
I
SIGH
Ar
Pr
1–1section by embankment
sectiune1–1 prin terasament
sectiune2–2 prin terasament
2–2section by embankment
.50
5.00
.50
.20
−2.17
.34
1.40
1.64
1:1
0.2%
−3.99(488.448)
−3.98(488.444)
0.2%
−3.97(488.430)
.40
.40
.45
.10
−4.480
−5.480
1.00
.80
.40
H
Fundatia podetului
drumului de intretinere
Fundatia podetului
drumului de intretinere
6.44
.02
4.84
(8x1.62)+(2x1.60)=16.16m
3.10
1.08
6.20
5.00
2.00
C
D
E
F
G

488.460	488.448	488.444	488.442	488.43	488.420	488.420	488.414
0.000	6.131	9.251	10.331	16.331	21.531	23.531	26.741

E IN PLAN E–E/E–E PLAN VIEW

Scara 1:100

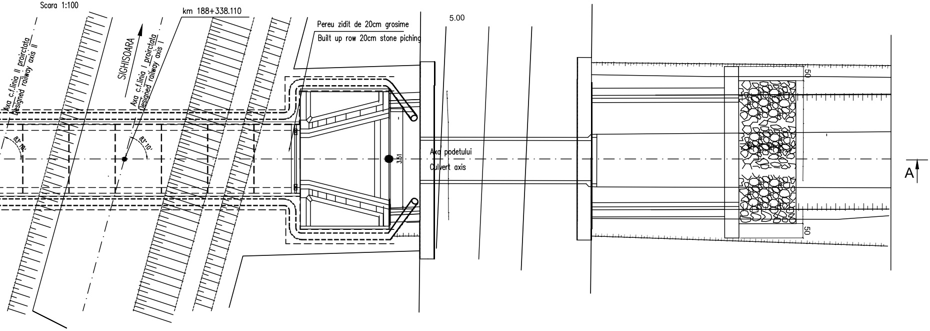
km 188+338.110
Axa c.f.linia II proirctata
Designed railway axis II
SIGHISOARA
Axa c.f.linia I proirctata
Designed railway axis I
83°10'
83°10'
Pereu zidit de 20cm grosime
Built up row 20cm stone piching
5.00
3.51
Axa podetului
Culvert axis
50
50
A

VEDERE B-B / WIEW B-B

Scara 1:100

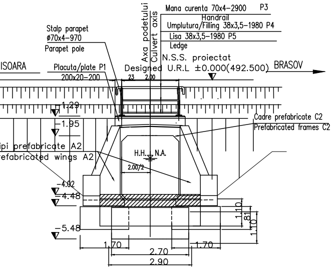

Axa podetului
Culvert axis
Mana curenta 70x4-2900 P3
Handrail
Umplutura/Filling 38x3,5-1980 P4
Lisa 38x3,5-1980 P5
Ledge
Stalp parapet
ø70x4-970
Parapet pole
N.S.S. proiectat
Designed U.R.L ±0.000(492.500)
ISOARA
BRASOV
Placuta/plate P1
200x20-200
23
2.00
1.29
-1.95
Cadre prefabricate C2
Prefabricated frames C2
ripi prefabricate A2
refabricated wings A2
H.H.
N.A.
2.00/2
-4.02
-4.48
1.10
.81
1.10
-5.48
1.70
2.70
1.70
2.90

SECTIUNE TRANSVERSALA C-C/C-C CROSS SECTION

Scara 1:100

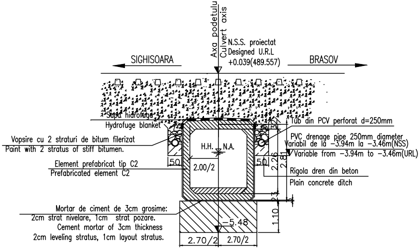

Axa podetului
Culvert axis
N.S.S. proiectat
Designed U.R.L
+0.039(489.557)
SIGHISOARA
BRASOV
Suba hidrofuga
Hydrofuge blanket
Tub din PCV perforat d=250mm
PVC drenage pipe 250mm diameter
Variabil de la -3.94m la -3.46m(NSS)
Variable from -3.94m to -3.46m(URL)
Vopsire cu 2 straturi de bitum filerizat
Paint with 2 stratus of stiff bitumen.
H.H.
N.A.
50
50
2.26
2.81
.30
2.00/2
Element prefabricat tip C2
Prefabricated element C2
Rigola dren din beton
Plain concrete ditch
Mortar de ciment de 3cm grosime:
2cm strat nivelare, 1cm strat pozare.
Cement mortar of 3cm thickness
2cm leveling stratus, 1cm layout stratus.
.25
1.10
-5.48
2.70/2
2.70/2

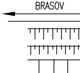

BRASOV
Aripi prefab
Prefabricat

SECTIUNE E-E

CROSS-SECTION E-E

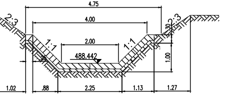

4.75
4.00
2.00
2:3
1:1
1:1
2:3
.30
488.442
1.00
1.02
.88
2.25
1.13
1.27

SECTIUNE F-F

CROSS-SECTION F-F

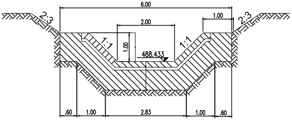

6.00
2.00
1.00
2:3
1:1
1:1
2:3
1.00
488.433
.60
1.00
2.83
1.00
.60

SECTIUNE G-G

CROSS-SECTION G-G

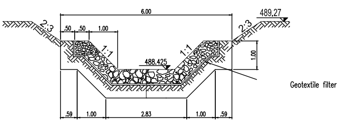

6.00
489.27
2:3
.50
.50
1.00
1:1
1:1
2:3
488.425
1.00
Geotextile filter
.59
1.00
2.83
1.00
.59

PLANUL FUNDATIILOR SECTIUNE H-
SECTION FOUNDATION PLAN

Scara 1:100

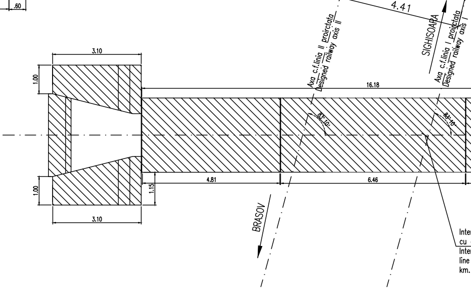

4.41
Axa c.f.linia II proiectata
Designed railway axis II
SIGHISOARA
Axa c.f.linia I proiectata
Designed railway axis I
3.10
1.00
16.18
83°10'
83°10'
1.00
1.15
4.81
6.46
3.10
BRASOV
Inter
cu
Inter
line
km.

VEDERE D-D / WIEW D-D

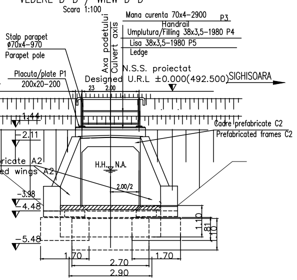
Scara 1:100
Mana curenta 70x4-2900 P3
Handrail
Umplutura/Filling 38x3,5-1980 P4
Lisa 38x3,5-1980 P5
Ledge
Stalp parapet
ø70x4-970
Parapet pole
Axa podetului
Culvert axis
N.S.S. proiectat
Designed U.R.L ±0.000(492.500)
SIGHISOARA
Placuta/plate P1
200x20-200
23
2.00
1.44
-2.11
Cadre prefabricate C2
Prefabricated frames C2
ricate A2
ed wings A2
H.H. N.A.
2.00/2
-3.98
-4.48
-5.48
1.10
81
10
1.70
1.70
2.70
2.90

VEDERE IN PLAN
VIEW PLAN

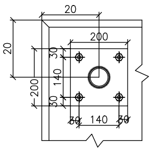
20
20
200
200
30
140
30
30
140
30

DETALIU PENTRU PRINDEREA PLACUTELOR P1 DE TIMPAN
DETAIL TO JOIN THE SLABS P1 AT THE TYMPANUM

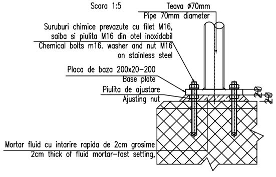
Scara 1:5
Teava ø70mm
Pipe 70mm diameter
Suruburi chimice prevazute cu filet M16,
saiba si piulita M16 din otel inoxidabil
Chemical bolts m16. washer and nut M16
on stainless steel
Placa de baza 200x20-200
Base plate
Piulita de ajustare
Ajusting nut
20
20
Mortar fluid cu intarire rapida de 2cm grosime
2cm thick of fluid mortar-fast setting,

H /H-H
N

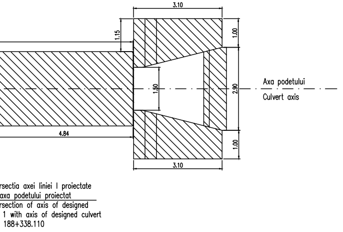
3.10
1.15
1.00
1.50
2.90
1.00
4.84
3.10
Axa podetului
Culvert axis
rsectia axei liniei I proiectate
axa podetului proiectat
rsection of axis of designed
1 with axis of designed culvert
188+338.110

NOTA:

1. Prezentul plan s-a intocmit pe baza urmatoarelor date: -plan de situatie; profil in lung; profil transversal; fisa podului; calcul hidraulic; date culese pe teren.
2. Podetul corespunde la convoaiele de calcul UIC (LM71 si SW/2)
3. La executie se vor respecta cu strictete prevederile din "Normativ pentru producerea betonului si executarea lucrarilor din beton, beton armat si beton precomprimat. Partea 1: Producerea betonului", indicativ NE 012/1-2007 si "Normativ pentru producerea betonului si executarea lucrarilor din beton, beton armat si beton precomprimat. Partea 2: Executarea lucrarilor din beton", indicativ NE 012/2-2010, iar verificarea calitatii lucrarilor si receptionarea lor se va face conform normativului C56-1985.
4. Daca la executie se vor constata neconcordante intre situatia existenta pe teren si cea din proiect se va anunta proiectantul.
5. Constructia se incadreaza in categoria de importanta B (constructii de importanta deosebita), modelul 1 de asigurare a calitatii si clasa de importanta B, conform HG 766/1997.
6. Proiectul va fi verificat la exigentele A4.2; B2.2; D2.2.
7. Se atrage in mod deosebit atentia asupra obligativitatii rezemarii elevatiilor prefabricate pe blocul de fundatie prin intermediul unui strat de mortar de ciment pentru a se realiza un contact perfect pe toata suprafata intre talpa prefabricatului si fundatie. Se interzice rezemarea directa fara strat de moratar de ciment.

NOTE:

1. This plan has been drawn up based on the following data: -Lay-out Plan; Longitudinal Profile; Cross-section Profile; Bridge's File; Hydraulic determination; Field Data.
2. The culvert corresponds to the UIC determination convoys (LM71 and SW/2).
3. The execution will strictly comply with the provisions of "Practice code for the concrete production and works execution, reinforced and pre-stressed concrete - Part 1: Practice code for concrete production" NE 012/1-2007 and "Practice code for the concrete production and works execution, reinforced and pre-stressed concrete - Part 2: The execution of concrete works." NE 012/2-2010, and the quality and the reception of the works shall be made accordingly to Norm C 56-1985.
4. If during the execution, discrepancies are found between the existing situation on site and the situation stated in the project, the designer will be noticed.
5. The construction has been classified in B category of importance (high importance constructions), model 1-ensuring the quality and class of importance B according to G.O. 766/97.
6. The project will be checked in order to comply with the A4.2; B2.2; D2.2 requirements.
7. Particular attention is drawn on binding prefabricated elevations settlement on block foundation through a layer of cement mortar to achieve a perfect contact over the entire surface between precast and foundation base.Propping is prohibited without direct layer of cement mortar.

MATERIAL METALIC PENTRU CONFECTIONAREA PARAPETULUI PODETULUI
THE METALLIC MATERIAL TO BUILD PARAPET OF CULVERT

Poz. Piece	Denumirea materialului The denomination of the material OL EN 10025 - S235 JR	Buc.	Sectiune Section	Lung. Long. (mm)	Sectiune/Section		
					kg/ml	kg/buc	kg
P1	Placuta prindere Clamping plate	4	200x20	200	31.40	6.28	25.12
P2	Stalp parapet EN 10297 - E275 Parapet pole	4	70x4	970	6.51	6.32	25.26
P3	Mana curenta EN 10297 - E275 Handrail	2	70x4	2900	6.51	18.88	37.76
P4	Umplutura EN 10058 Filling	2	38x3,5	1980	2.98	5.90	11.80
P5	Lisa EN 10058 Ledge	2	38x3,5	1980	2.98	5.90	11.80
Total partial Partially total							111.74
Sudura 2% Welding 2%							2.24
TOTAL kg							115

This drawing is forbidden to be copied, lent or used in other purposes than those previously approved by AREX *Lider* Company as its owner.
Se interzice copierea, difuzarea, imprumutarea sau utilizarea in alte scopuri, fara permisiunea AREX *Lider* Company ca proprietar al desenului.

D					
C					
B					
A	11.2011	Revizia 1	Ioan Rentea		
Indice Index	Data Date	Modificare Modification/Revision	Proiectant Designer	Aprobat Consultant Approved Consultant	Aprobat CFR Approved CFR

CLIENT / CLIENT

CFR

C.N.C.F. "C.F.R." - S.A.

ITALFERR
GRUPPO FERROVIE DELLO STATO
Joint Venture leader

Scott Wilson

OBERMEYER
PLANEN + BERATEN GmbH

TECNIC
Consulting Engineers

CONSULTANT / CONSULTANT

			Data Date	SemnŁturŁ Signature
Aprobat Approved	Şef proiect Project manager	R. Liuzza		
Aprobat Approved	Coordonator Secţiune 1 Section 1 Coordinator	C. Gambelli		
Verificat Checked	Expert Cheie Checking Expert	V.Kallidromitis		VK

SUBCONTRACTANT / SUBCONTRACTOR

AREX Lider COMPANY

Aprobat Approved	Responsabil Subconsultant Subconsultant Responsible	A. Dinulescu Stanciu	05.2011	
Ìtocmit Elaborated	Proiectant Designer	Ioan Rentea	05.2011	

Reabilitarea liniei de cale ferata Braşov - Simeria, parte componentŁ a coridorului IV Pan European, pentru circulaŞa trenurilor cu viteza maximŁ de 160 km/h, **Tronsonul :**
Braşov - Sighişoara
Rehabilitation of the railway line Braşov - Simeria, component Part of the IV Pan-European Corridor, for the trains circulation with maximum speed of 160 km/h,
Section : Braşov - Sighişoara

Proiect/Project
2004/RO/16/P/PA/003

Faza / Phase:
P.Th. / T.D.

Denumire desen / Drawing Title :

INTERVAL BOD - FELDIOARA / BOD - FELDIOARA SECTION
PODET - KM 188+338.110 / CULVERT KM 188+338.110
DISPOZITIE GENERALA / GENERAL DISPOSITION

Codificare / Codification System	Scara / Scale	LOT / LOT	Nr. / No
	1:100; 1:5		01 / 01

E A 5 1 | 0 1 | C | 0 6 | P A | P O | 0 1 | 1 | 1 | 0 0 2 | 1

1578/297