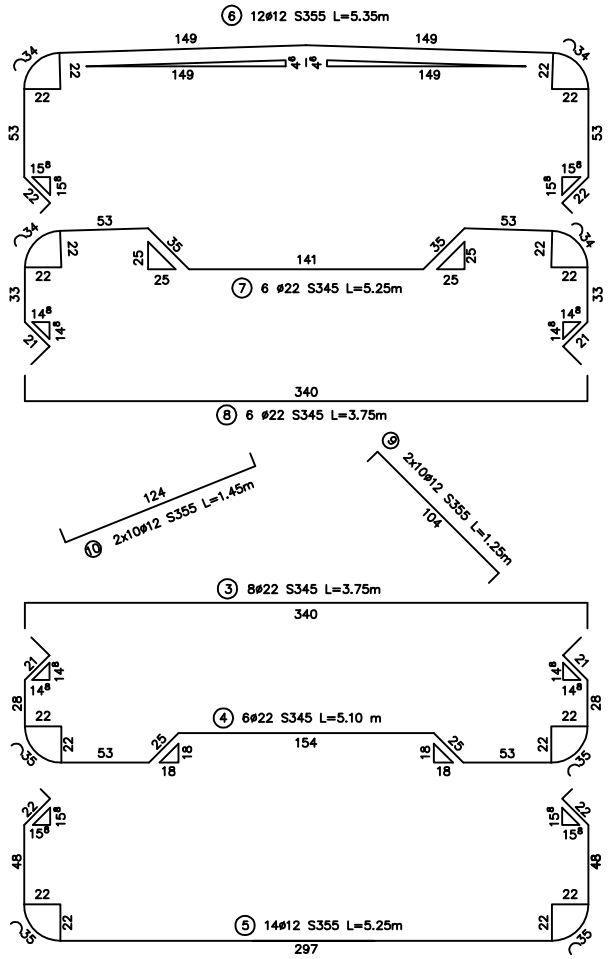

LEGENDA BETOANELOR/CONCRETE LEGEND

Beton armat element prefabricat
Reinforcement concrete precast element
C 35/45 – CEM II A S 32.5 – (XC4+XF3+XA1)
A/C=0.50 – Dmax 22 – Cl 0.20

CLASA DE PRECIZIE/CLASS PRECISION = 7
CONFORM/ACCORDING SR EN 13369–89

CLASA DE DURABILITATE/CLASS
DURABILITY: D32/45a(XC4+XF3+XA1)
ACOPERIRE/COVERAGE: 4 cm S4(XC4+XF3+XA1)
pentru o durata de viata de 50 ani/for a life duration of 50 years
OTEL BETON/CONCRETE STEEL –S355;S235
BETON /CONCRETE – C 35/45

DETALIU DE COLT / CORNER DETAIL

Sc. 1:5

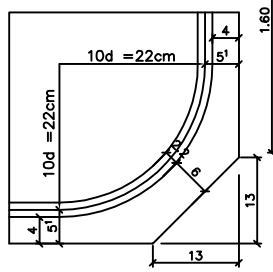

SECTIUNE A–A/SECTION A–A

Sc. 1:20

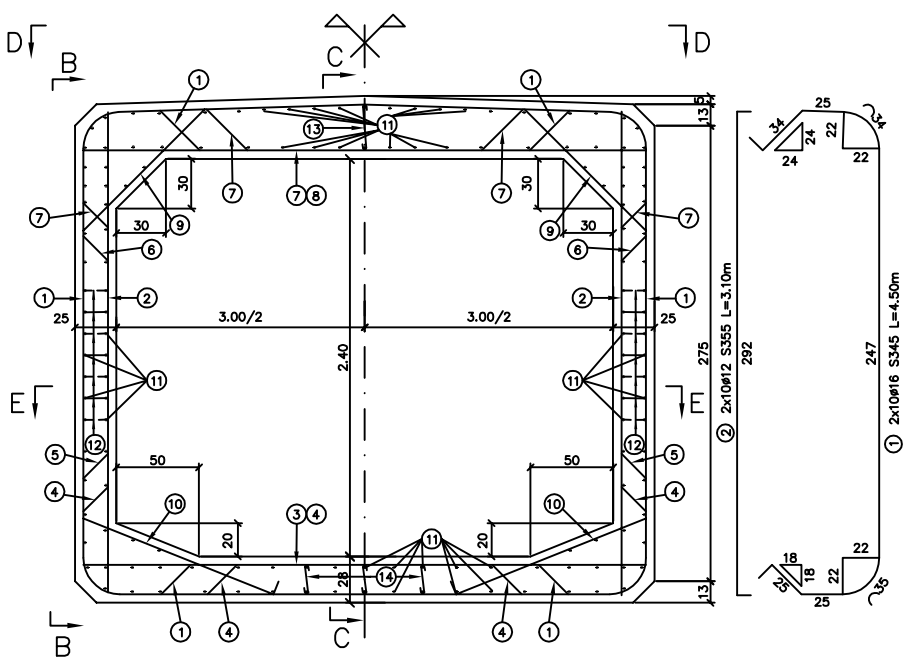

VEDERE B–B / VIEW B–B

Sc. 1:20

SECTIUNE C–C / SECTION C–C

Sc. 1:20

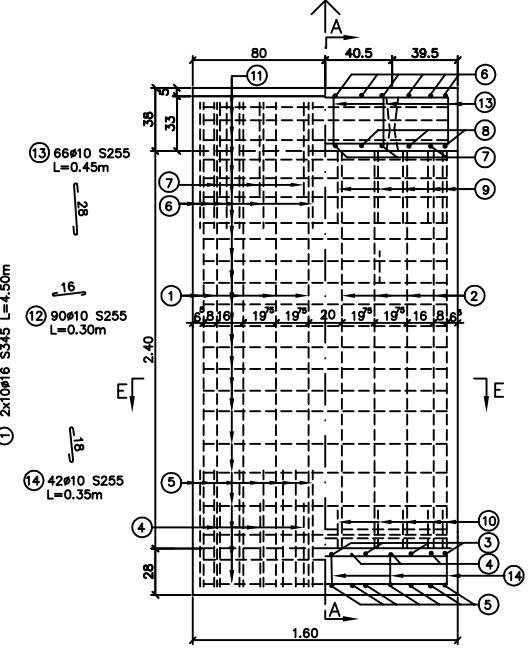

SECTIUNE a–a / SECTION a–a

Sc. 1:50

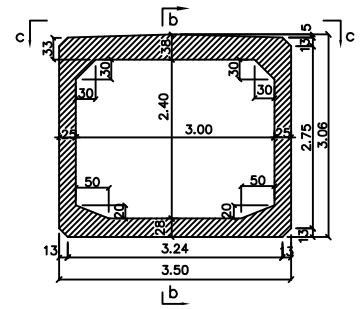

SECTIUNE b–b / SECTION b–b

Sc. 1:50

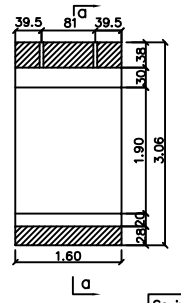

VEDERE c–c / VIEW c–c

Sc. 1:50

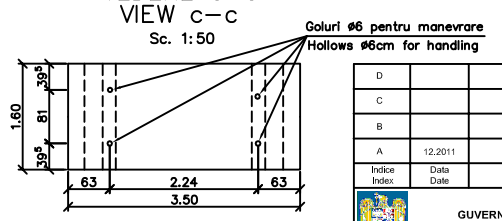

CARACTERISTICILE PENTRU UN ELEMENT PREFABRICAT CURENT C3

CHARACTERISTICS FOR ONE PREFAB ELEMENT, SECTION C3

Beton	5.72 m³
Armaturi S255	193.00 kg
Armaturi S355	226.00 kg
Armaturi S345	485.00 kg
Cofraj	43.75 m²
Greutate	14.30 t

Se interzice copierea, difuzarea, imprumutarea sau utilizarea in alte scopuri, fara permisiunea AREX *Lider* Company ca proprietar al desenului.
This drawing is forbidden to be copied, lent or used in other purposes than those previously approved by AREX *Lider* Company as its owner.

Indice Index	Data Date	Modificare Modification/Revision	Proiectant Designer	Aprobat Consultant Approved Consultant	Aprobat CFR Approved CFR
D					
C					
B					
A	12.2011	Revizia 1	Balan Carmen		

GUVERNUL ROMANIEI / ROMANIAN GOVERNMENT

PROIECT FINANTAT DE UNIUNEA EUROPEANA / EUROPEAN UNION FINANCED PROJECT

CLIENT / CLIENT: C.N.C.F. "C.F.R." - S.A.

ITALFERR GRUPPO FERROVIE DELLO STATO – Joint Venture leader; Scott Wilson; OBERMEYER PLANEN + BERATEN GmbH; TECNIC Consulting Engineers

CONSULTANT / CONSULTANT			Data Date	Semnătură Signature
Aprobat Approved	Şef proiect Project manager	R. Liuzza		
Aprobat Approved	Coordonator Secţiune 1 Section 1 Coordinator	C. Gambelli		
Verificat Checked	Expert Cheie Checking Expert	V. Kalldromitis		

SUBCONTRACTANT / SUBCONTRACTOR				
Aprobat Approved	Responsabil Subconsultant Subconsultant Responsible	A. Dinulescu Stanciu	11.2011	
Întocmit Elaborated	Proiectant Designer	Balan Carmen	11.2011	

Reabilitarea liniei de cale ferata Braşov - Simeria, parte componentă a coridorului IV Pan European, pentru circulaţia trenurilor cu viteza maximă de 160 km/h,
Tronsonul : Braşov - Sighişoara
Rehabilitation of the railway line Braşov - Simeria, component Part of the IV Pan-European Corridor, for the trains circulation with maximum speed of 160 km/h,
Section : Braşov - Sighişoara

Proiect/Project 2004/RO/16/P/PA/003

Faza / Phase: P.Th. / T.D.

Denumire desen / Drawing Title :

PLAN COFRAJ SI ARMARE PENTRU ELEMENT PREFABRICAT C3
CONCRETE FORMING AND REINFORCEMENT PLAN FOR PRECAST ELEMENTS C3

Codificare / Codification System: E A 5 1 | 0 1 | E | 0 0 | B C | P O | 0 0 | 0 | 0 | 0 0 2 | 1

Scara / Scale: 1:50 1:20 1:5 | LOT / LOT | Nr. / No 01 / 01

NOTA

1. Dupa decofrare, peretii exteriori se vor vopsi cu solutie de bitum filerizat in dublu strat.
2. Sapa hidroizolatoare si acoperirea de rost se vor executa pe santier, dupa asezarea elementelor pe blocul de fundatie.
3. Pentru manevrarea prefabricatului se vor lasa patru goluri in placa superioara a cadrului, amplasate conform planului.
   Dupa montarea definitiva in amplasament a tronsoanelor, golurile vor fi umplute cu mortar.
4. La elementul de beton C3 se aplica planul de timpan T3.
5. Tronsoanele se vor aseza pe blocul de fundatie monolit prin intermediul unui strat de mortar de ciment Mortarul se va pune in doua straturi; unul pentru nivelare si urmatorul strat de 1cm, pentru asezarea prefabricatelor.
   Inainte aplicarii mortarului se va curata perfect suprafata de contact a betonului monolit.

NOTE

1. After removing the shuttering, the outdoor walls will be filler bitumen painted in two layers.
2. The waterproofing blanket and the joint covering will be carried out on site, after placing the elements on the foundation block.
3. To handle the prefab, four hollows will be provided in the upper plate of the frame, being placed according to the plan.
   After the final mounting of the sections in the location, the hollows will be mortar filled.
4. The tympanum plan T3 is to be applied to the concrete element C3.
5. The sections will be placed on the cast–in–place foundation block using a cement mortar layer. The mortar will be placed in two layers, one for leveling and the other of 1cm in order to place the prefabs.
   Before applying the mortar, the contact surface of the cast–in–place concrete will be properly cleaned.

VEDERE D–D / VIEW D–D

Sc. 1:20

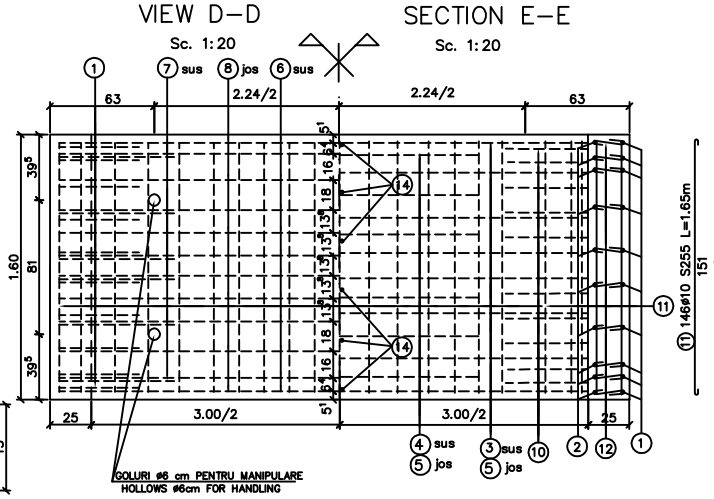

SECTIUNE E–E / SECTION E–E

Sc. 1:20

DETALIU DE PRINDERE AGRAFELOR DE PERETE / DETAIL TO FASTEN THE WALL CRAMPS

Sc. 1:5

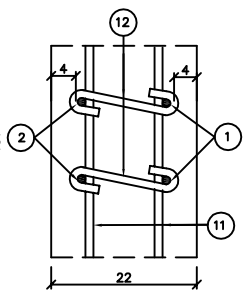

EXTRAS DE ARMATURA / STANDARD FOR REINFORCEMENT

Marca Mark	ø (mm)	Buc. asem. Similar pieces	Lungimi pe buc. Length for pcs.	Lungimi totale/diametru Total length/diameter (m) S255 ø10	S355 ø12	S355 ø16	S345 ø22
1	16	20	4.50			90.00	
2	12	20	3.10	62.00			
3	22	8	3.75				30.00
4	22	6	5.10				30.60
5	12	14	5.25		73.50		
6	12	12	5.35		64.20		
7	22	6	5.25				31.50
8	22	6	3.75				22.50
9	12	20	1.25		25.00		
10	12	20	1.45		29.00		
11	10	146	1.65	240.90			
12	10	90	0.30	27.00			
13	10	66	0.45	29.70			
14	10	42	0.35	14.70			
Lungimi/diametre Leght/diameter				312.30	253.70	90.00	114.60
Greutate/metru Weight/meter				0.617	0.888	1.578	2.984
Greutate/diametre Weight/Diameter				193.00	226.00	143.00	342.00
Greutate/tip de otel Weight/type for steel				193	226	485	
TOTAL (kg)				904			