CURRENT SECTION A–A
SECTIUNEA CURENTA A–A
REINFORCEMENTS
ARMATURI
Scale/Scara 1:50

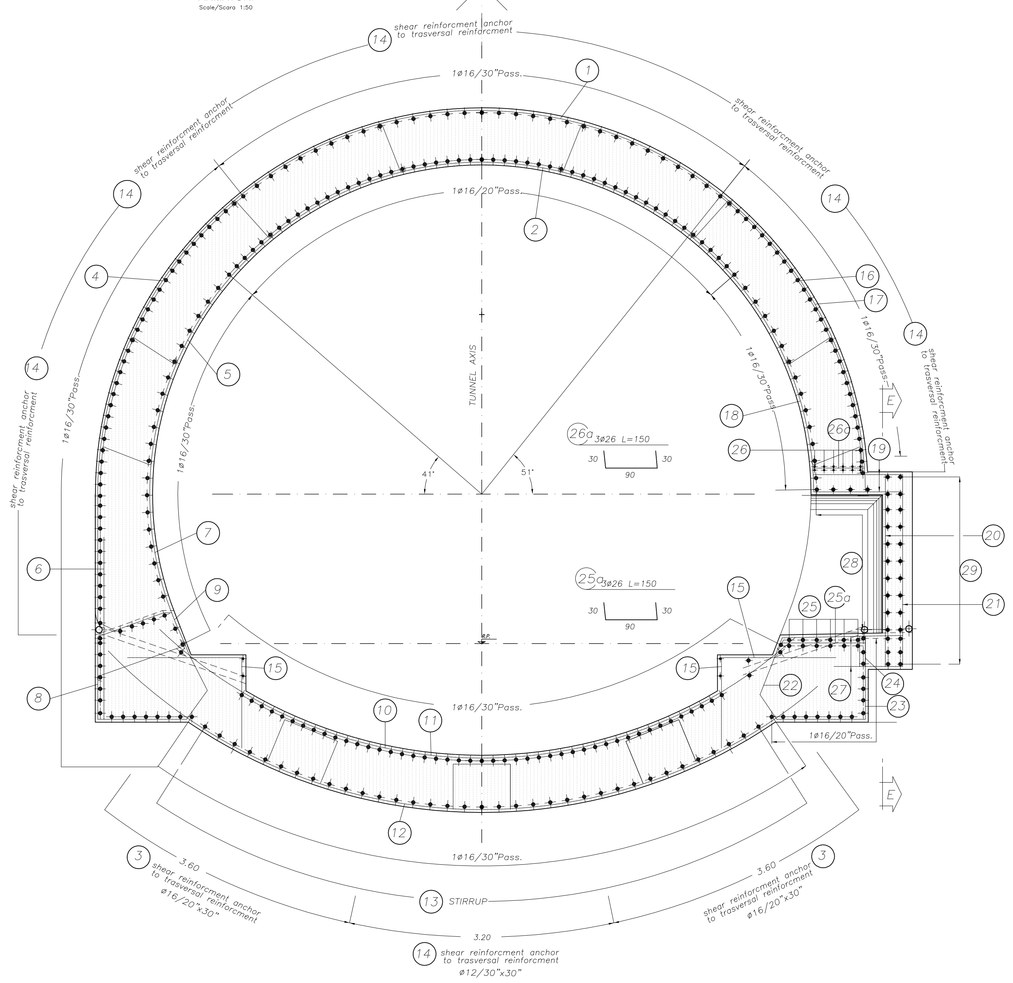

SECTION B–B WITH SHELTER STAFF NICHE
SECTIUNE B–B CU NISE PENTRU ADAPOSTUL PERSONALULUI
Scale/Scara 1:50

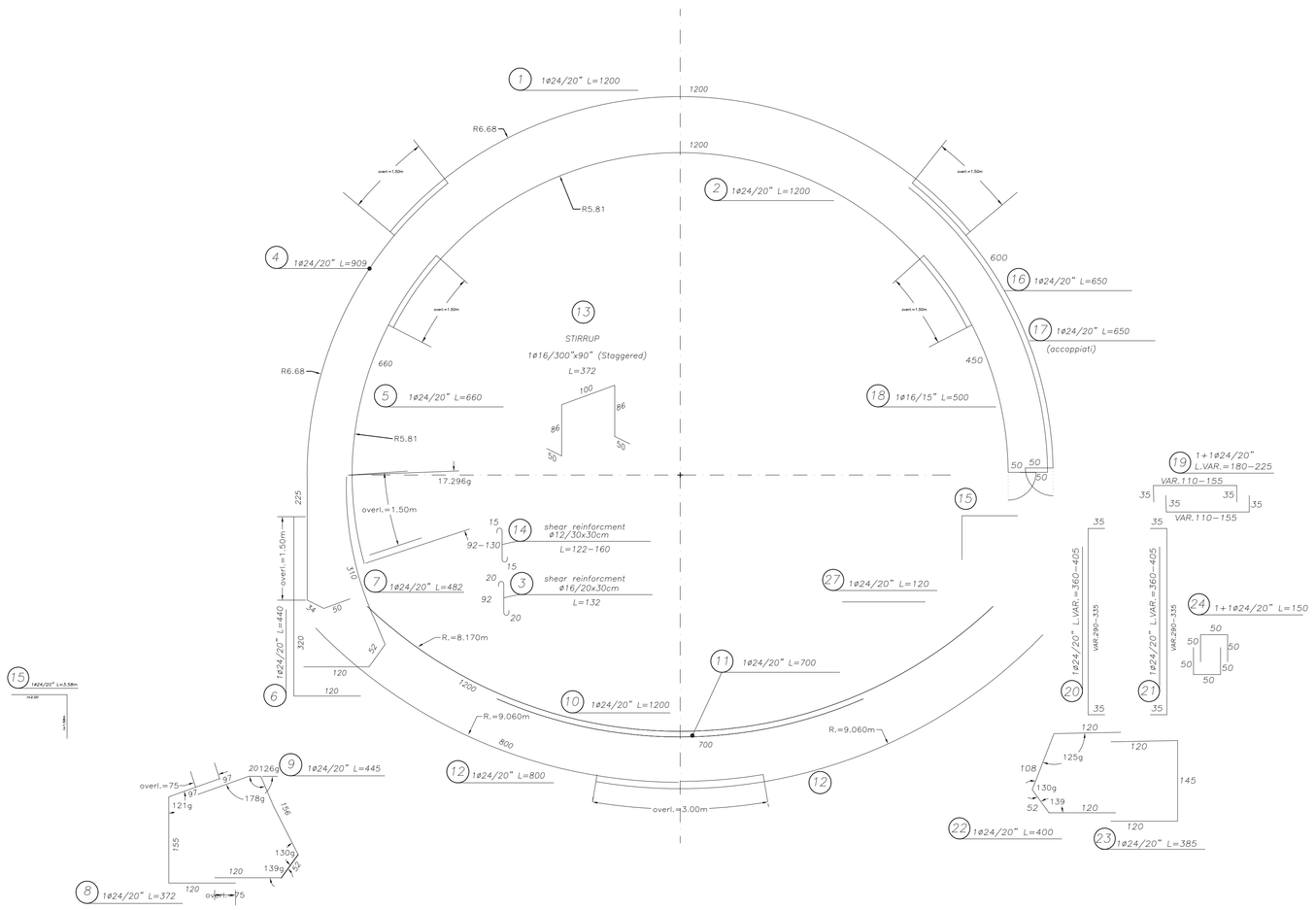

STEELS TABLE

REINFORCING STEEL:

– B450C (weldable)

Bending diameter d_{Br} :

ø Bar < ø20 –> d_{Br} = 6ø

ø Bar ø20–ø26–> d_{Br} = 8ø

Legend measures:

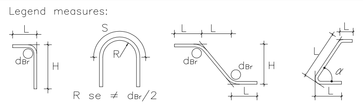

MATERIAL TABLE

TUNNEL INVERT CONCRETE:

- Type C2
- fck >=30 MPa
- Water/cement ratio <0.50
- Minimun structural Class S3/S4
- Exposure class related to environmental conditions: XA2
- Cement type CEM III/V
- Class of chloride content Cl 0.20
- ø max aggregate = 32 mm

TUNNEL CROWN CONCRETE:

- Type C1
- fck >=30 MPa
- Water/cement ratio <0.50
- Minimun structural Class S4/S5
- Exposure class related to environmental conditions: XA2
- Cement type CEM III/V
- Class of chloride content Cl 0.20
- ø max aggregate = 32 mm

REINFORCING STEEL:

- B450C controled by establishment
- Weldable

LEAN CONCRETE:

- Type I
- fck >=12 MPa
- Cement type CEM I/V

LEGEND

RP = REFERENCE PLANE
EX = EXCAVATIONS PLANE
PC = CENTERS PLANE

PLAN WITH SHELTER STAFF NICHE
PLAN CU NISE PENTRU ADAPOSTUL PERSONALULUI
Scale/Scara 1:50

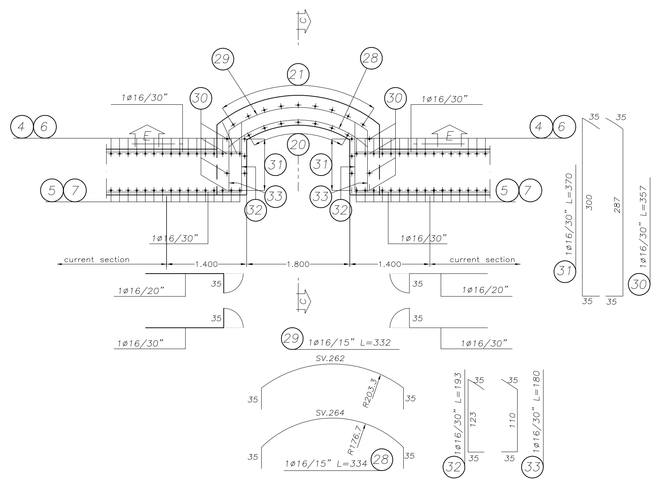

CURRENT SECTION C–C
SECTIUNEA CURENTA C–C
REINFORCEMENTS
ARMATURA
Scale/Scara 1:50

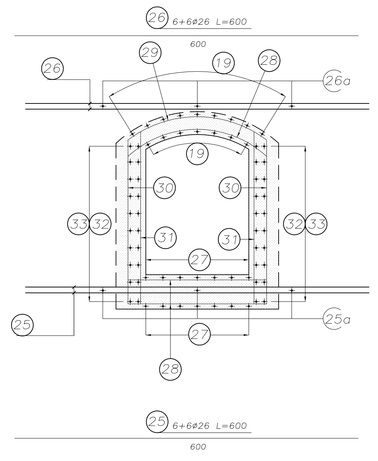

Indice Index	Data Date	Modificare Modification/Revision	Proiectant Designer	Aprobat Consultant Approved Consultant	Aprobat CFR Approved CFR
D					
C					
B					
A					

GUVERNUL ROMANIEI
ROMANIAN GOVERNMENT

PROIECT FINANŢAT DE UNIUNEA EUROPEANĂ
EUROPEAN UNION FINANCED PROJECT

CLIENT / CLIENT: C.N.C.F. "C.F.R." - S.A.

ITALFERR GRUPPO FERROVIE DELLO STATO – Joint Venture leader; Scott Wilson; OBERMEYER PLANEN + BERATEN GmbH; TECNIC Consulting Engineers

CONSULTANT / CONSULTANT

			Data Date	Semnătură Signature
Aprobat Approved	Şef proiect Project manager	R. Liuzza		
Aprobat Approved	Coordonator Secţiune 1 Section 1 Coordinator	C.Gambelli		
Verificat Checked	Tunel Expert Tunnel Expert	C. Gambelli		
Întocmit Elaborated	Proiectant Designer	C.Gambelli		

SUBCONSULTANT / SUBCONSULTANT

Aprobat Approved	Responsabil Subconsultant Subconsultant Responsible			
Întocmit Elaborated	Proiectant Designer			

Reabilitarea liniei de cale ferata Braşov - Simeria, parte componentă a coridorului IV Pan European, pentru circulaţia trenurilor cu viteza maximă de 160 km/h. Secţiune 1 Braşov - Sighişoara

Rehabilitation of the railway line Braşov - Simeria, component Part of the IV Pan-European Corridor, for the trains circulation with maximum speed of 160 km/h. Section 1 Brasov - Sighisoara

Proiect/Project: 2004/RO/16/P/PA/003

Faza / Phase: P.Th. / T.D.

Denumire desen / Drawing Title : **ARCHITA 1 TUNNEL**
ENTRANCE BEIA SIDE
First segment: formworks
Primul segment: cofraje de constructie

Codificare / Codification System	Scara / Scale	LOT	Nr. / No
E A 5 1 0 1 C 1 4 B B G A 0 6 0 0 0 0 5 0	variat / various		-