SECTION A–A
SECTIUNEA CURENTA A–A
Scale/Scara 1:50

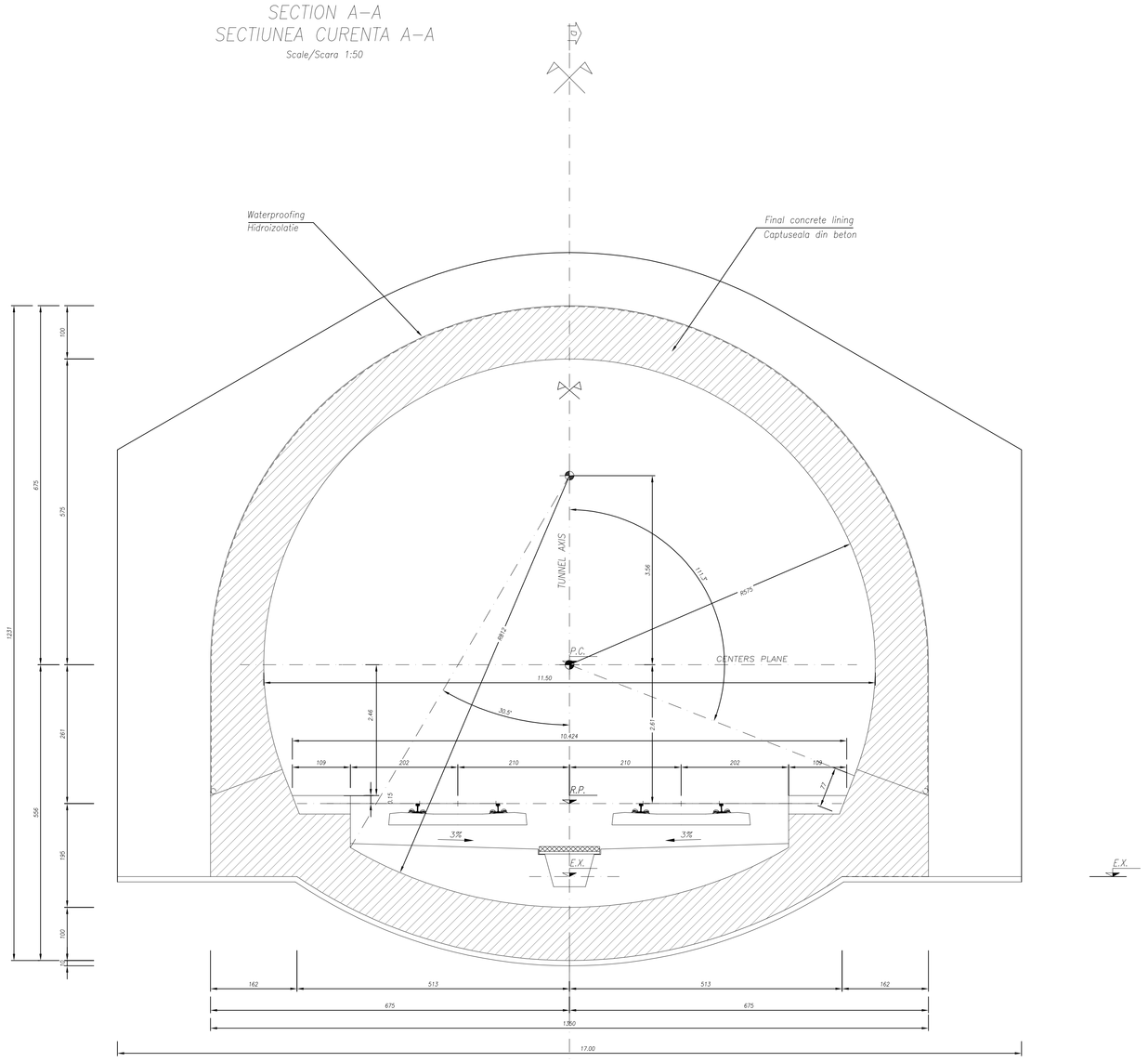

SECTION D–D
SECTIUNEA D–D
Scale/Scara 1:50

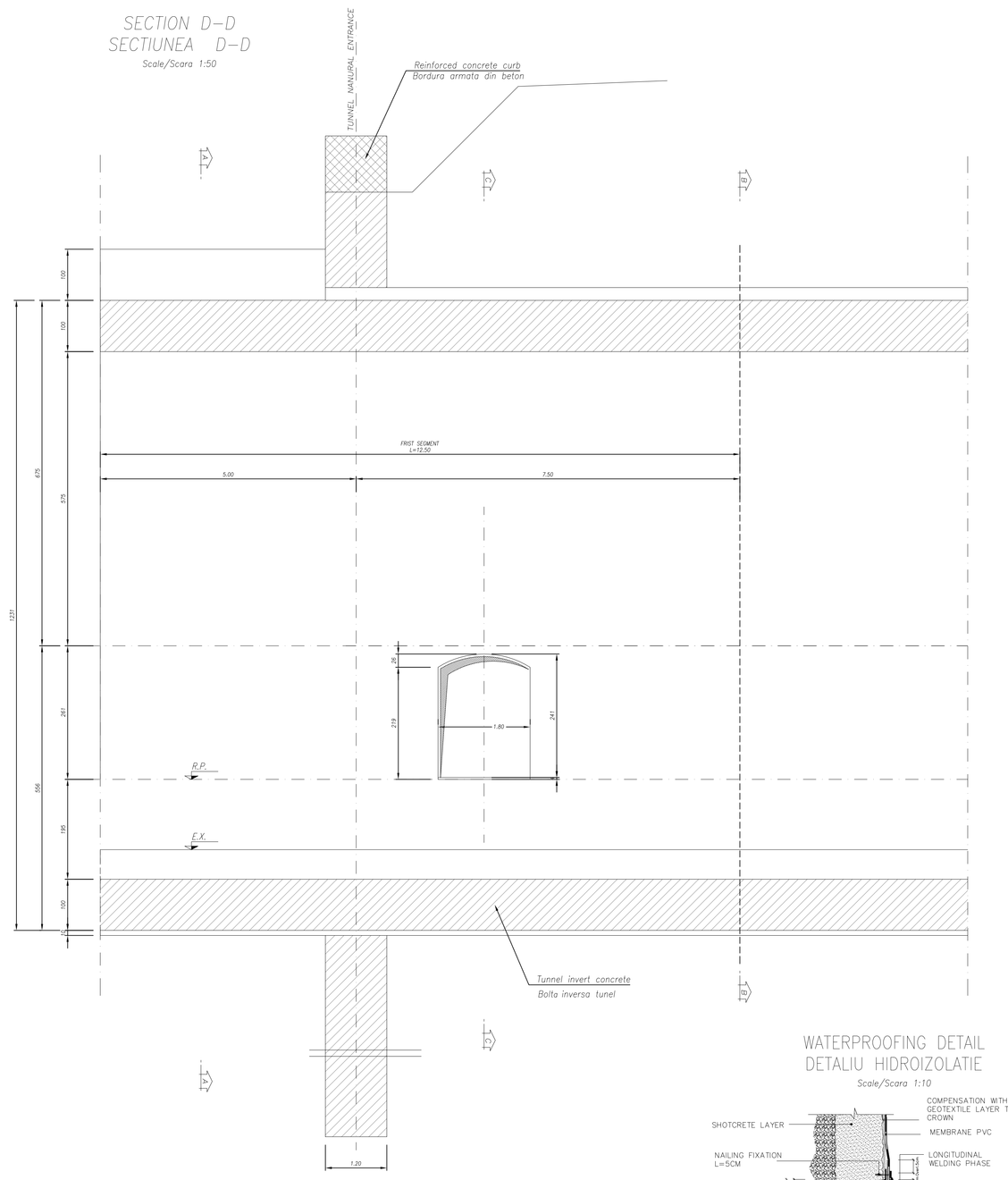

WATERPROOFING DETAIL
DETALIU HIDROIZOLATIE
Scale/Scara 1:10

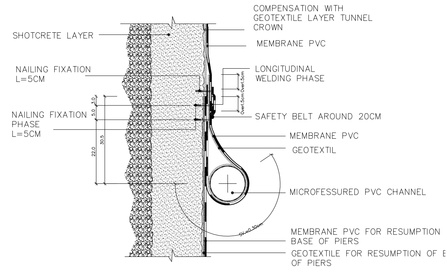

SECTION B–B
SECTIUNEA CURENTA B–B
Scale/Scara 1:50

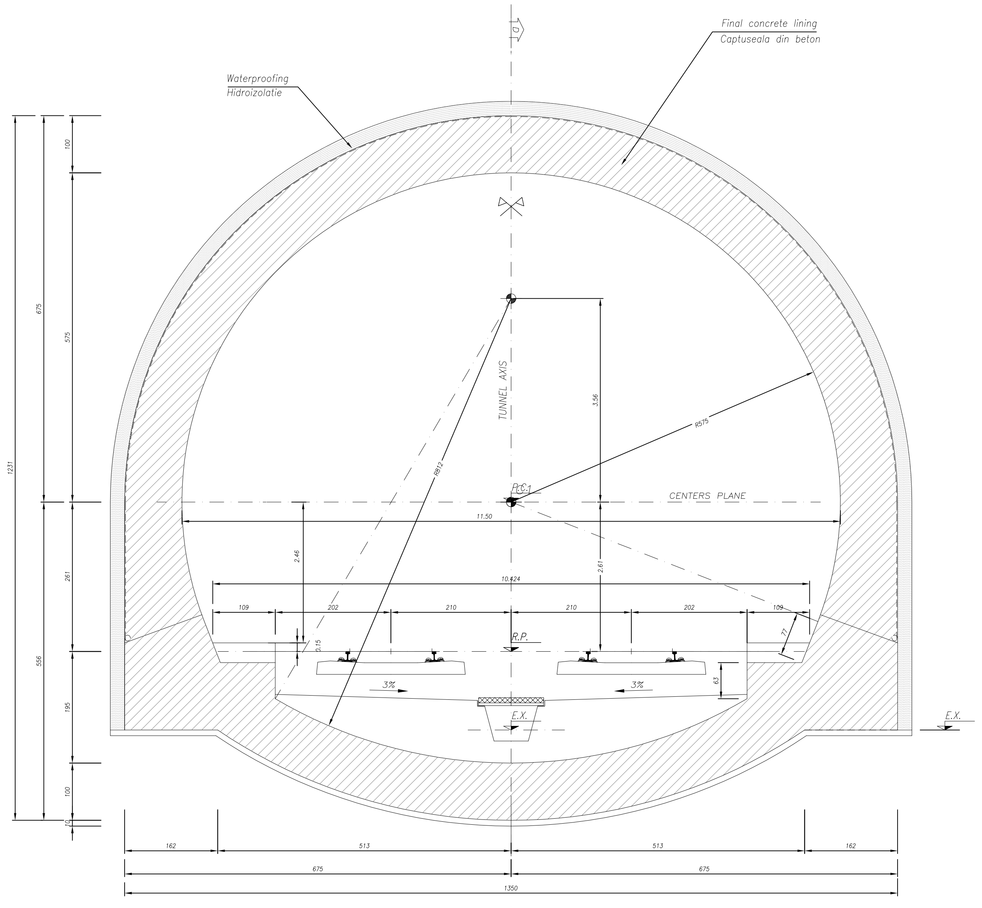

SECTION C–C
SECTIUNEA CURENTA C–C
Scale/Scara 1:50

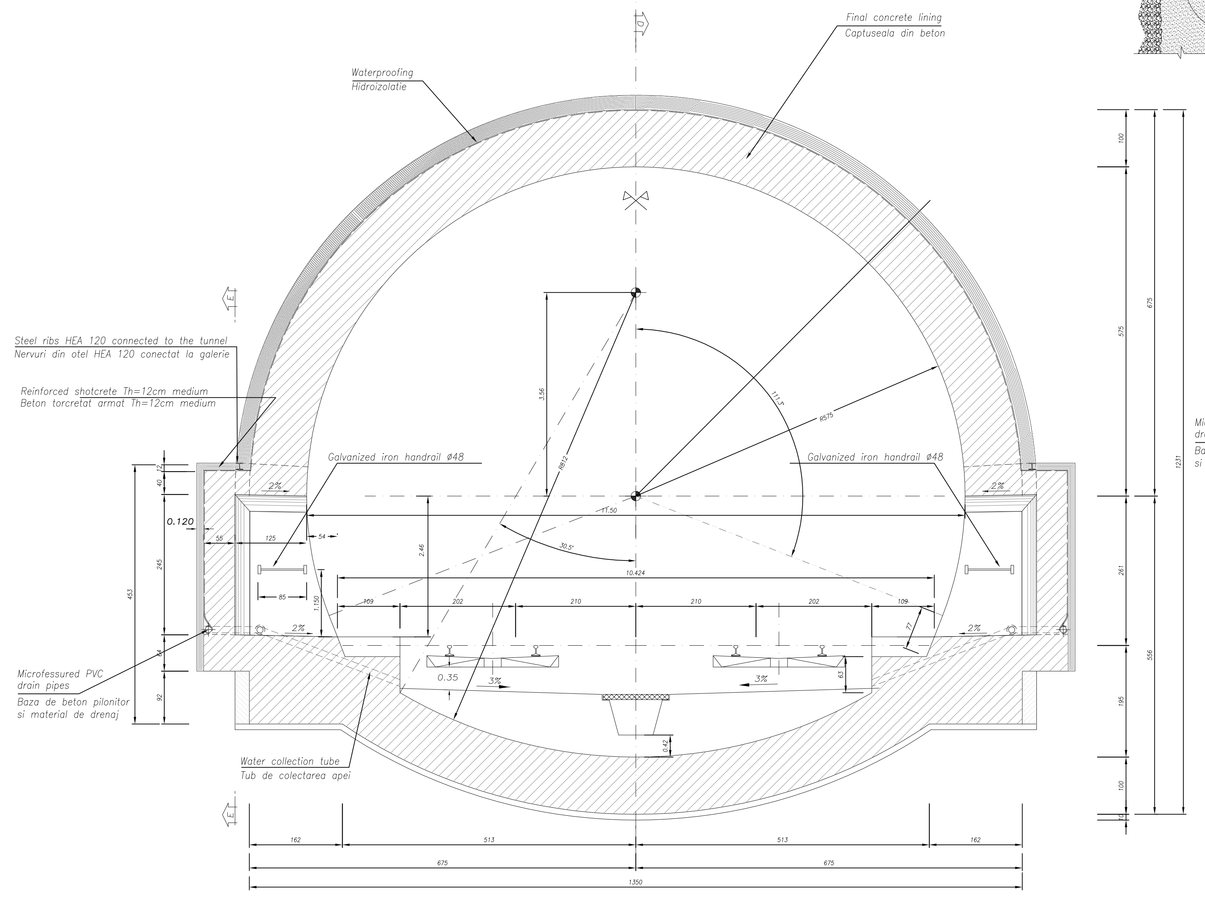

SECTION E–E
SECTIUNEA CURENTA E–E
Scale/Scara 1:50

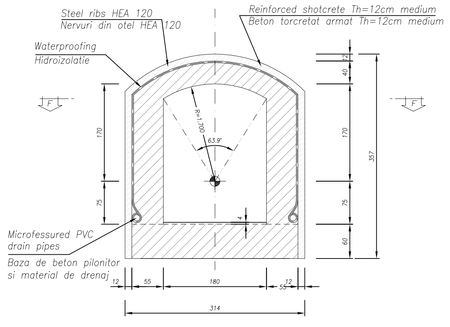

SECTION F–F
SECTIUNEA CURENTA F–F
Scale/Scara 1:50

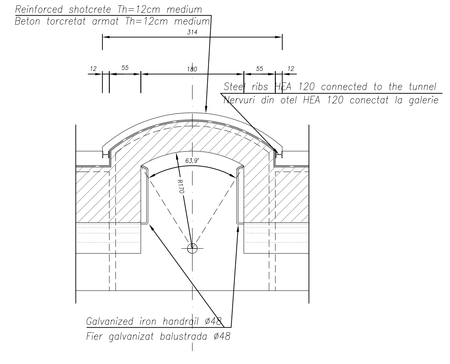

MATERIAL TABLE

TUNNEL INVERT CONCRETE:

- Type C2
- fck >=30 MPa
- Water/cement ratio <0.50
- Minimum structural Class S3/S4
- Exposure class related to environmental conditions: XA2
- Cement type CEM III/V
- Class of chloride content Cl 0.20
- ø max aggregate = 32 mm

TUNNEL CROWN CONCRETE:

- Type C1
- fck >=30 MPa
- Water/cement ratio <0.50
- Minimum structural Class S4/S5
- Exposure class related to environmental conditions: XA2
- Cement type CEM III/V
- Class of chloride content Cl 0.20
- ø max aggregate = 32 mm

REINFORCING STEEL:

- B450C controled by establishment
- Weldable

LEAN CONCRETE:

- Type I
- fck >=12 MPa
- Cement type CEM I/V

LEGEND

RP = REFERENCE PLANE
EX = EXCAVATIONS PLANE
PC = CENTERS PLANE

NOTE:
- The integrety of the concrete structures of the artificial and natural tunnels have to maintened in case of fire (4.2.2.3 Fire protection requirements for structure TSI Technical Specification for interoperability).

NOTA:
- Integritatea structurii de beton a tunelului artificiale si naturale, trebuie sa ramana integru in caz de incendiu (4.2.2.3 cerintele de protectie la foc pentru structuri STI Specificatii tehnice pentru interoperabilitate).

NOTE:
- Handrail shall be installated approximately at 1 m above walkway providing a route to a safe area (4.2.2.7. Escape walkways TSI).

NOTA:
- Bara de mâna trebuie sa fie instalata aproximativ la 1 m deasupra caii de evacuare aterind un traseu într-o zona sigura (4.2.2.7 evacuare trotuare STI).

NOTE:
- Escape signs shall be installated on the side walls at a maximum distance between escape signs of 50m (4.2.2.9 Escape Signage TSI).

NOTA:
- Semnele de evacuare trebuie sa fie instalate pe pereti laterali, la o distanta maxima între semne de evacuare de 50m (4.2.2.9 Escape Signage STI).

Indice Index	Data Date	Modificare Modification/Revision	Proiectant Designer	Aprobat Consultant Approved Consultant	Aprobat CFR Approved CFR
D					
C					
B					
A					

GUVERNUL ROMANIEI
ROMANIAN GOVERNMENT

PROIECT FINANŢAT DE UNIUNEA EUROPEANĂ
EUROPEAN UNION FINANCED PROJECT

CLIENT / CLIENT

C.N.C.F. "C.F.R." - S.A.

ITALFERR GRUPPO FERROVIE DELLO STATO Joint Venture leader
Scott Wilson
OBERMEYER PLANEN + BERATEN GmbH
TECNIC Consulting Engineers

CONSULTANT / CONSULTANT

			Data Date	Semnătură Signature
Aprobat Approved	Şef proiect Project manager	R. Liuzza		
Aprobat Approved	Coordonator Secţiune 1 Section 1 Coordinator	C.Gambelli		
Verificat Checked	Tunel Expert Tunnel Expert	C. Gambelli		
Întocmit Elaborated	Proiectant Designer	C.Gambelli		

SUBCONSULTANT / SUBCONSULTANT

Aprobat Approved	Responsabil Subconsultant Subconsultant Responsibile			
Întocmit Elaborated	Proiectant Designer			

Reabilitarea liniei de cale ferata Braşov - Simeria, parte componentă a coridorului IV Pan European, pentru circulaţia trenurilor cu viteza maximă de 160 km/h. Sectiune 1 Brasov - Sighisoara

Rehabilitation of the railway line Braşov - Simeria, component Part of the IV Pan-European Corridor, for the trains circulation with maximum speed of 160 km/h. Section 1 Brasov - Sighisoara

Proiect/Project 2004/RO/16/P/PA/003

Faza / Phase: P.Th. / T.D.

Denumire desen / Drawing Title : **ARCHITA 1 TUNNEL**
ENTRANCE ARCHITA SIDE
First segment: formworks
Primul segment: cofraje de constructie

Codificare / Codification System	Scara / Scale	LOT	Nr. / No
E A 5 1 0 1 C 1 4 B B G A 0 7 0 0 0 0 4 0	variat / various		.