GENERAL PLAN / PLANUL GENERAL

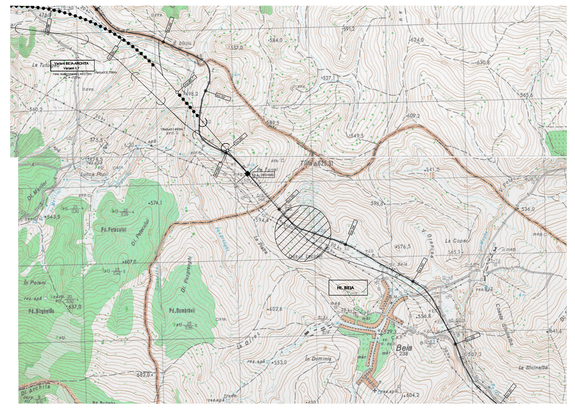

SECTION A–A
SECTIUNEA A–A
Scale/Scara 1:200

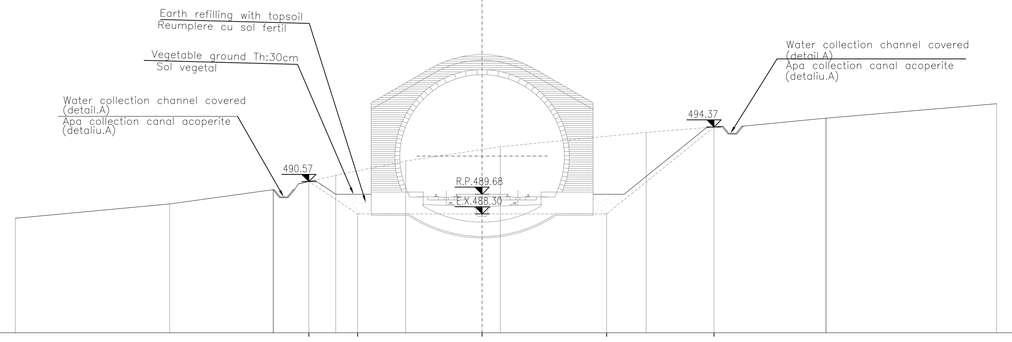

Ref. Level: +480.00

| | | |