SECTION A–A
SECTIUNEA CURENTA A–A
Scale/Scara 1:50

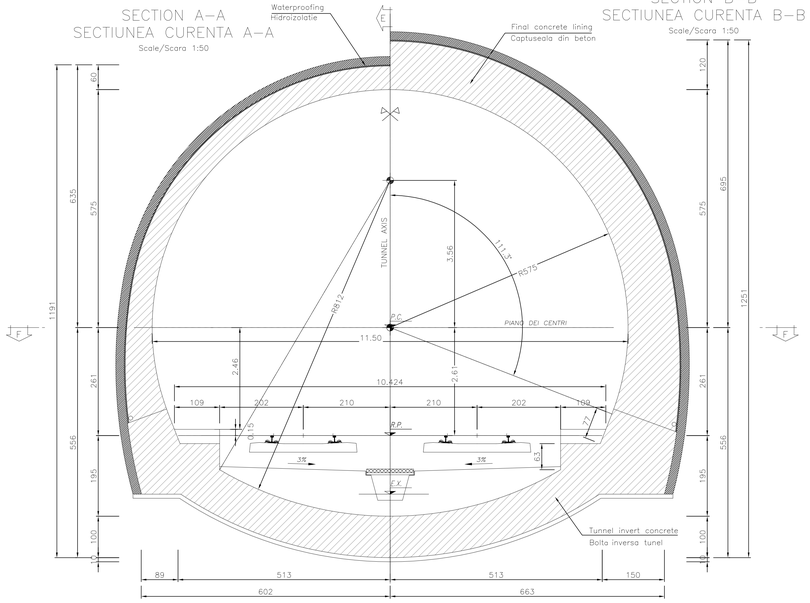

SECTION B–B
SECTIUNEA CURENTA B–B
Scale/Scara 1:50

SECTION D–D
SECTIUNEA CURENTA D–D
Scale/Scara 1:50

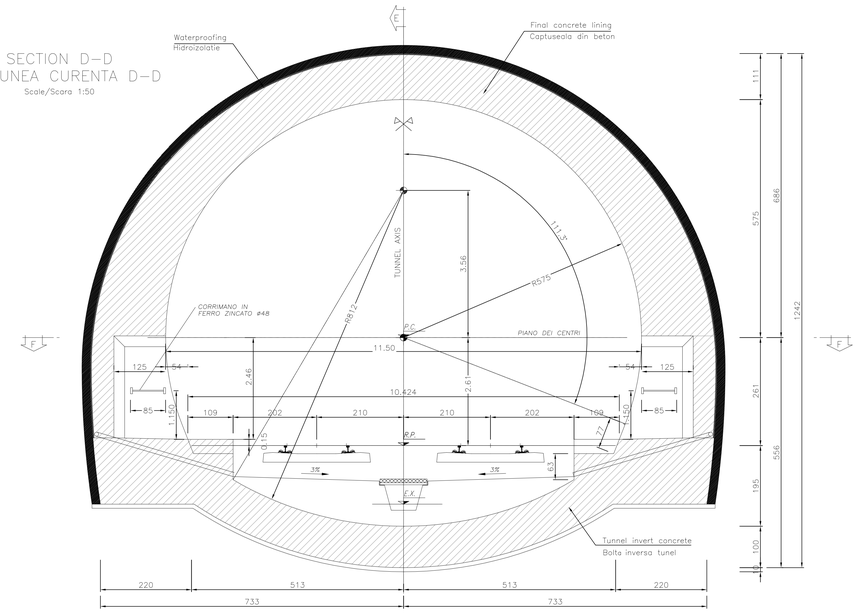

WATERPROOFING DETAIL
DETALIUL HIDROIZOLATIEI

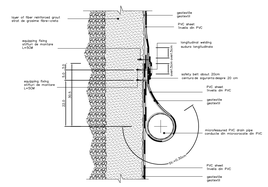

SECTION E–E
SECTIUNEA CURENTA E–E
Scale/Scara 1:50

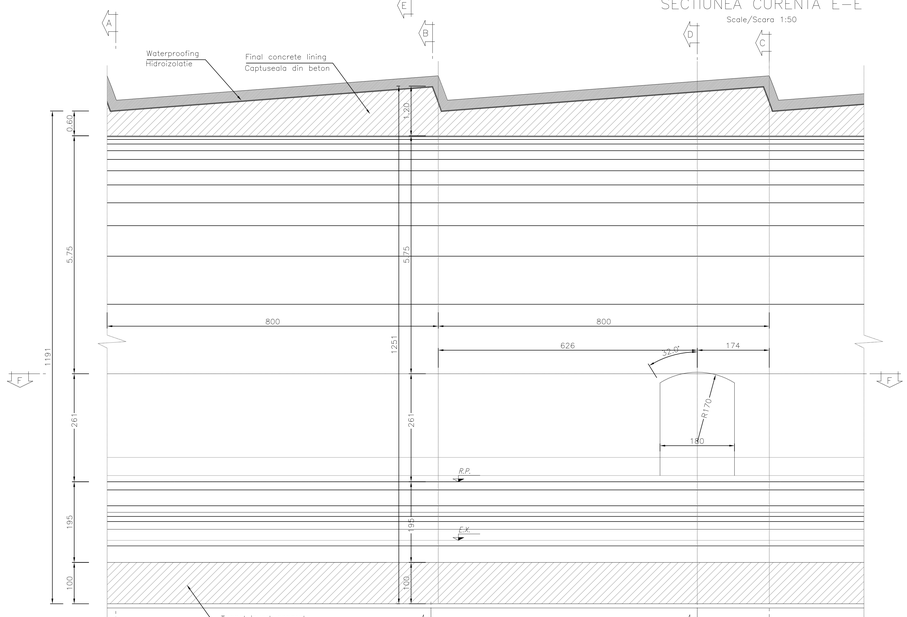

SECTION F–F
SECTIUNEA CURENTA F–F
Scale/Scara 1:50

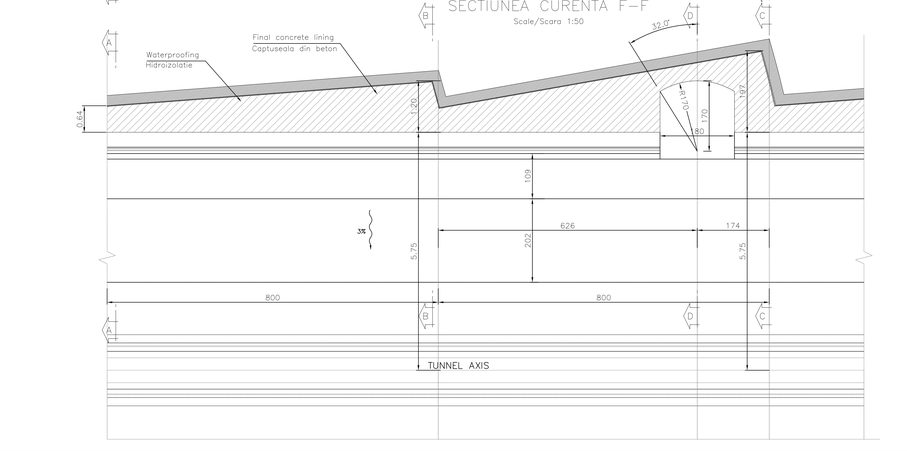

SECTION C–C
SECTIUNEA CURENTA C–C
Scale/Scara 1:50

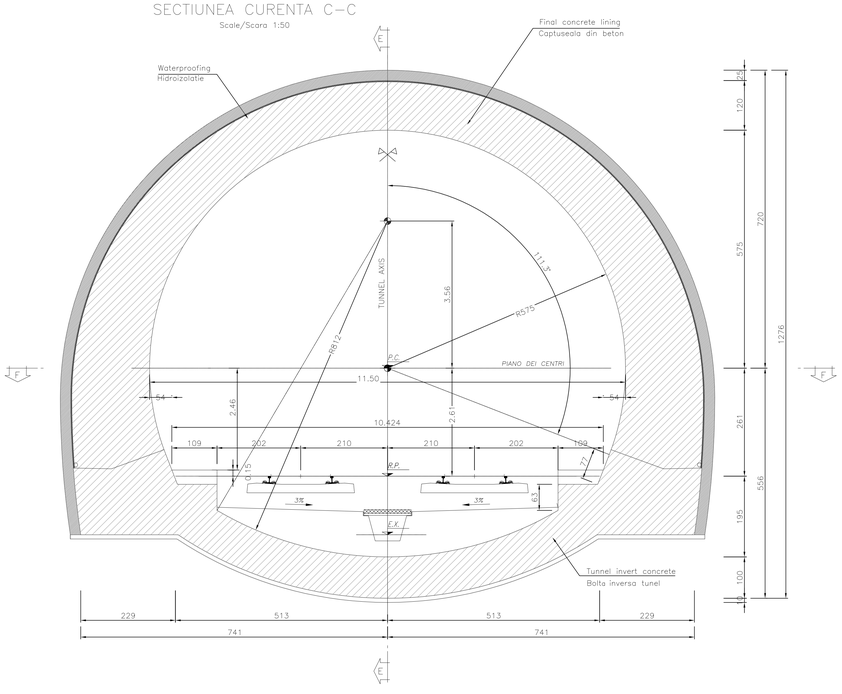

MATERIAL TABLE

TUNNEL INVERT CONCRETE:

- Type C2
- fck >=30 MPa
- Water/cement ratio <0.50
- Minimun structural Class S3/S4
- Exposure class related to environmental conditions: XA2
- Cement type CEM III/V
- Class of chloride content Cl 0.20
- ø max aggregate = 32 mm

TUNNEL CROWN CONCRETE:

- Type C1
- fck >=30 MPa
- Water/cement ratio <0.50
- Minimun structural Class S4/S5
- Exposure class related to environmental conditions: XA2
- Cement type CEM III/V
- Class of chloride content Cl 0.20
- ø max aggregate = 32 mm

REINFORCING STEEL:

- B450C controled by establishment
- Weldable

LEAN CONCRETE:

- Type I
- fck >=12 MPa
- Cement type CEM I/V

LEGEND

RP = REFERENCE PLANE
EX = EXCAVATIONS PLANE
PC = CENTERS PLANE

Indice Index	Data Date	Modificare Modification/Revision	Proiectant Designer	Aprobat Consultant Approved Consultant	Aprobat CFR Approved CFR
D					
C					
B					
A					

GUVERNUL ROMANIEI
ROMANIAN GOVERNMENT

PROIECT FINANŢAT DE UNIUNEA EUROPEANĂ
EUROPEAN UNION FINANCED PROJECT

C.N.C.F. "C.F.R." - S.A.

CLIENT / CLIENT

ITALFERR GRUPPO FERROVIE DELLO STATO Joint Venture leader
Scott Wilson
OBERMEYER PLANEN + BERATEN GmbH
TECNIC Consulting Engineers

CONSULTANT / CONSULTANT

			Data Date	Semnătură Signature
Aprobat Approved	Şef proiect Project manager	R. Liuzza		
Aprobat Approved	Coordonator Secţiune 1 Section 1 Coordinator	C.Gambelli		
Verificat Checked	Tunel Expert Tunnel Expert	C. Gambelli		
Întocmit Elaborated	Proiectant Designer	C.Gambelli		

SUBCONSULTANT / SUBCONSULTANT

Aprobat Approved	Responsabil Subconsultant Subconsultant Responsible			
Întocmit Elaborated	Proiectant Designer			

Reabilitarea liniei de cale ferata Braşov - Simeria, parte componentă a coridorului IV Pan European, pentru circulaţia trenurilor cu viteza maximă de 160 km/h. Sectiune 1 Brasov - Sighisoara

Rehabilitation of the railway line Braşov - Simeria, component Part of the IV Pan-European Corridor, for the trains circulation with maximum speed of 160 km/h. Section 1 Brasov - Sighisoara

Proiect/Project
2004/RO/16/P/PA/003

Faza / Phase:
P.Th. / T.D.

Denumire desen / Drawing Title : **ARCHITA 2 TUNNEL**

NATURAL TUNNEL
Section type "C3"' with and without niches - Formwork
Sectiunea tip "C3"' cu si fara nise - Cofraje de constructie

Codificare / Codification System	Scara / Scale	LOT	Nr. / No
	variat / various		-

E A 5 1 0 1 C 1 4 B B G N 0 4 0 0 0 0 2 0