APPLIED TYPICAL CROSS SECTION
SECTIUNILE SPECIFICE TRANSVERSALE APLICATE

Scale/Scara 1:50

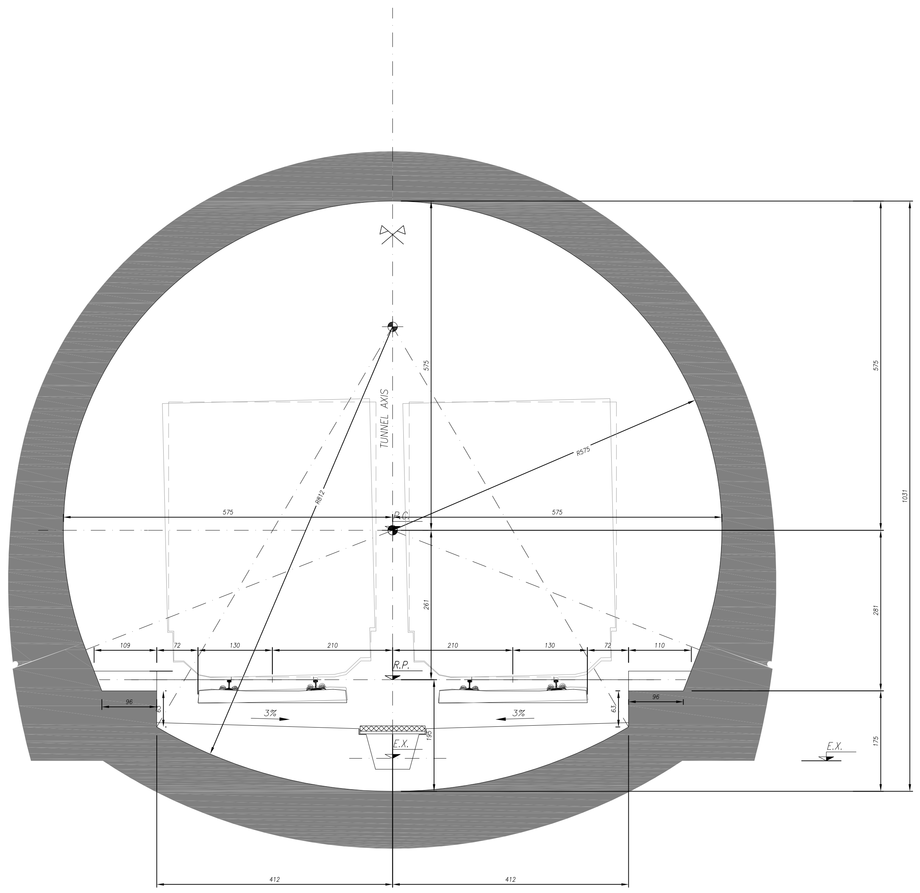

APPLIED TYPICAL CROSS SECTION
SECTIUNILE SPECIFICE TRANSVERSALE APLICATE

Scale/Scara 1:50

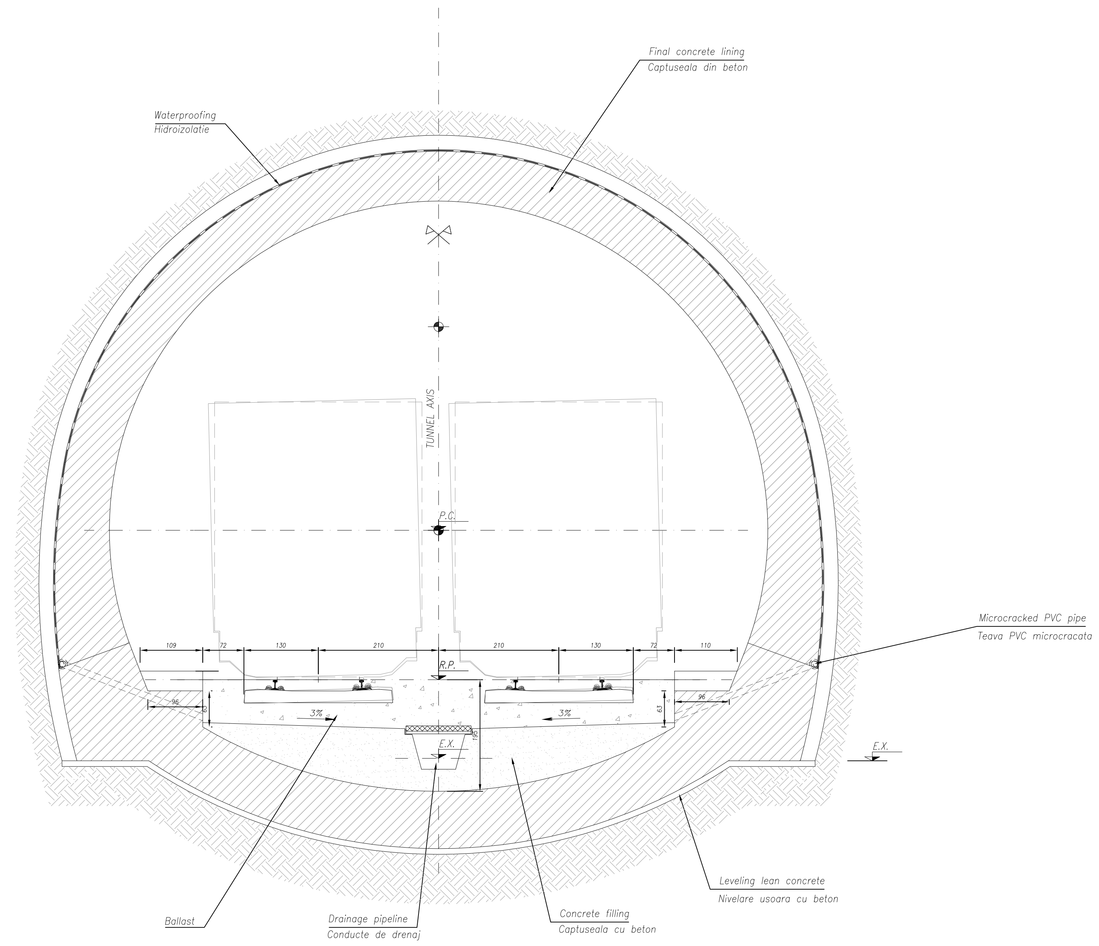

APPLIED TYPICAL CROSS SECTION
SECTIUNILE SPECIFICE TRANSVERSALE APLICATE

Scale/Scara 1:50

WITH SHELTER STAFF NICHE
CU NISE DE ADAPOST PENTRU PERSONAL

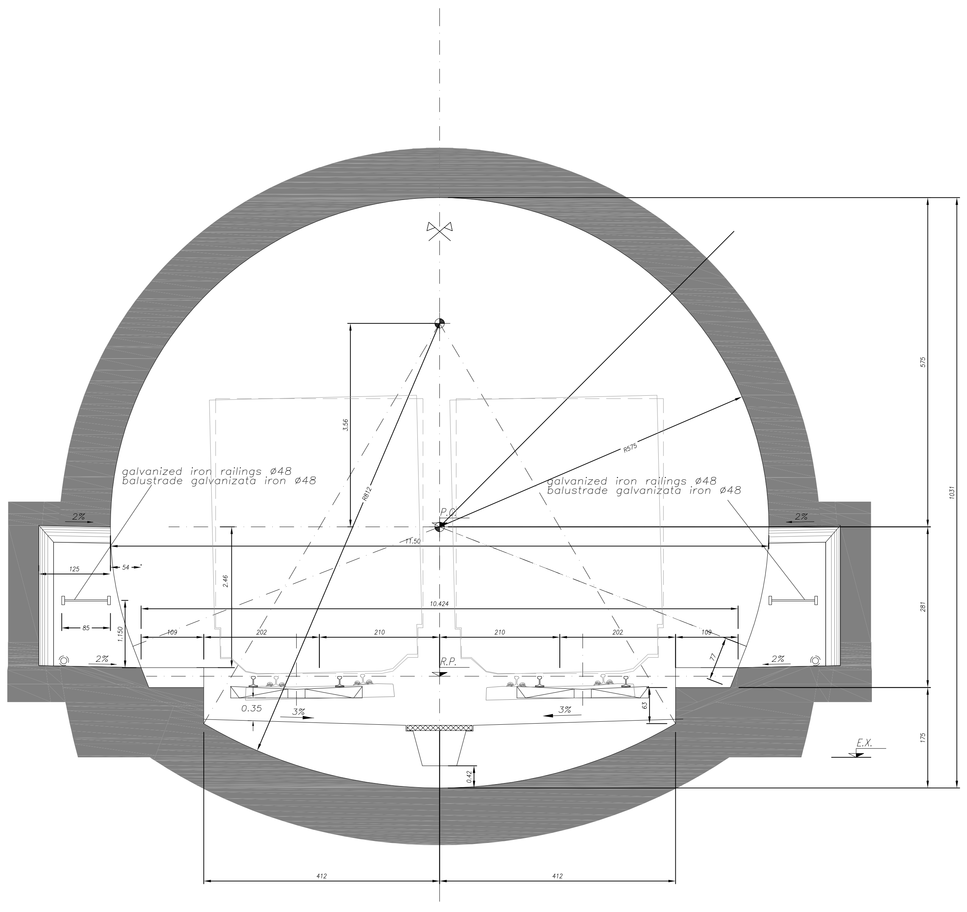

APPLIED TYPICAL CROSS SECTION
SECTIUNILE SPECIFICE TRANSVERSALE APLICATE

Scale/Scara 1:50

WITH SHELTER STAFF NICHE
CU NISE DE ADAPOST PENTRU PERSONAL

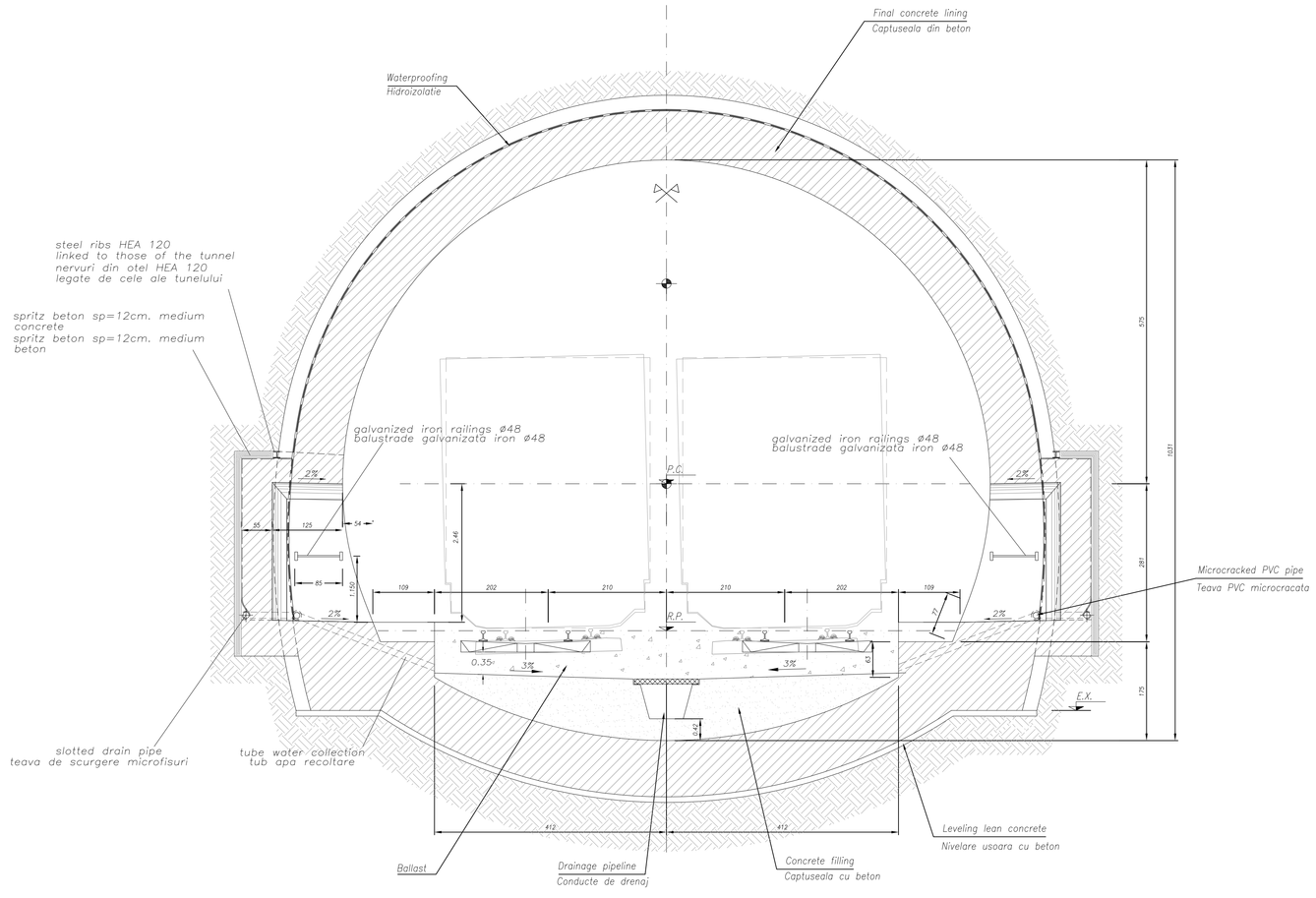

LEGEND

RP = REFERENCE PLANE
EX = EXCAVATIONS PLANE
PC = CENTERS PLANE

Indice Index	Data Date	Modificare Modification/Revision	Proiectant Designer	Aprobat Consultant Approved Consultant	Aprobat CFR Approved CFR
D					
C					
B					
A					

GUVERNUL ROMANIEI
ROMANIAN GOVERNMENT

PROIECT FINANŢAT DE UNIUNEA EUROPEANĂ
EUROPEAN UNION FINANCED PROJECT

CLIENT / CLIENT

C.N.C.F. "C.F.R." - S.A.

ITALFERR GRUPPO FERROVIE DELLO STATO Joint Venture leader
Scott Wilson
OBERMEYER PLANEN + BERATEN GmbH
TECNIC Consulting Engineers

CONSULTANT / CONSULTANT

			Data Date	Semnătură Signature
Aprobat Approved	Şef proiect Project manager	R. Liuzza		
Aprobat Approved	Coordonator Secţiune 1 Section 1 Coordinator	C.Gambelli		
Verificat Checked	Tunel Expert Tunnel Expert	C. Gambelli		
Întocmit Elaborated	Proiectant Designer	C.Gambelli		

SUBCONSULTANT / SUBCONSULTANT

Aprobat Approved	Responsabil Subconsultant Subconsultant Responsible			
Întocmit Elaborated	Proiectant Designer			

Reabilitarea liniei de cale ferata Braşov - Simeria, parte componentă a coridorului IV Pan European, pentru circulaţia trenurilor cu viteza maximă de 160 km/h. Sectiune 1 Brasov - Sighisoara

Rehabilitation of the railway line Braşov - Simeria, component Part of the IV Pan-European Corridor, for the trains circulation with maximum speed of 160 km/h. Section 1 Brasov - Sighisoara

Proiect/Project
2004/RO/16/P/PA/003

Faza / Phase:
P.Th. / T.D.

Denumire desen / Drawing Title : **ARCHITA 2 TUNNEL**
NATURAL TUNNEL
Internal and applied typical cross sections
Sectiuni transversale tip interne si aplicate

Codificare / Codification System	Scara / Scale	LOT	Nr. / No
E A 5 1 0 1 C 1 4 W B G N 0 4 0 0 0 0 1 0	varlat / various		-