D					
C					
B					
A					
Indice / Index	Data / Date	Modificare / Modification/Revision	Proiectant / Designer	Aprobat Consultant / Approved Consultant	Aprobat CFR / Approved CFR

GUVERNUL ROMANIEI
ROMANIAN GOVERNMENT

PROIECT FINANTAT DE UNIUNEA EUROPEANĂ
EUROPEAN UNION FINANCED PROJECT

C.N.C.F. "C.F.R." - S.A.

CLIENT / CLIENT

ITALFERR
Grupul feroviar român
Joint Venture leader

Scott Wilson

OBERMEYER RUMEN + BERATEN GmbH

TECNIC Consulting Engineers

CONSULTANT / CONSULTANT

				Semnătura / Signature
Aprobat / Approved	Şef proiect / Project manager	R. Lăzăroi		
Aprobat / Approved	Director / Contributor	C. Gambelli		
Verificat / Verified	Expert Tunel / Tunnel Expert	C. Gambelli		
Elaborat / Elaborated	Proiectant / Designer	C.Gambelli		

SUBCONSULTANT / SUBCONSULTANT

Aprobat / Approved	Responsabil Subconsultanţă / Subconsultant Responsible			
Elaborat / Elaborated	Proiectant / Designer			

Realizarea liniei de cale ferată Braşov - Simeria, parte componentă a coridorului IV Pan European, pentru circulaţia trenurilor cu viteza maximă de 160 km/h.
Secţiune 1 Braşov - Sighişoara

Rehabilitation of the railway line Braşov - Simeria, component Part of the IV Pan-European Corridor, for the trains circulation with maximum speed of 160 km/h.
Section 1 Braşov - Sighişoara

Proiect/Project
2004/RO/16/P/PA/003
Faza / Phase:
P.Th. / T.D.

Denumire desen / Drawing Title : **HOMOROD TUNNEL** **ENTRANCE PK205 SIDE**

Tunel entrance concrete pile wall: curb reinforced concrete - formwork and reinforcement
Pilee din beton a perelului de la intrarea în tunel: bordura din beton armat - cofraje şi armatură

Codificare / Codification System

Seria / Suite	Varianta / variant	Nr. / No.
variat / various	LOT	-

E A 5 1 0 1 C 1 2 B Z G A 0 3 0 0 0 0 3 0

CURB REINFORCED CONCRETE -TYPE 1
BORDURA DIN BETON ARMAT-TIP 1
Reinforcements/Armături
Scale/Scare 1:20

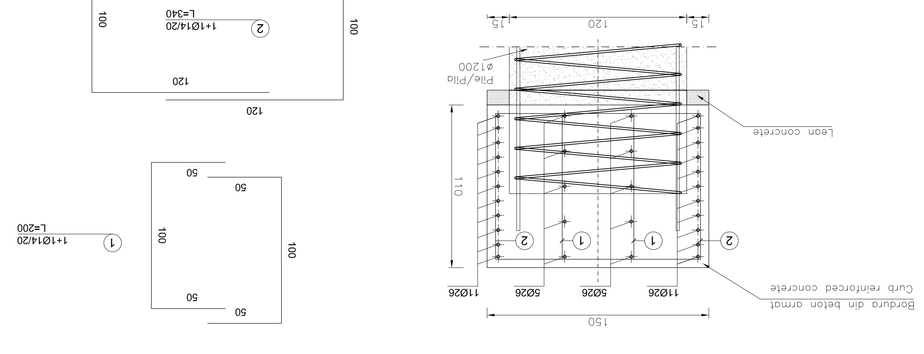

CURB REINFORCED CONCRETE ON PILES
BORDURA DIN BETON ARMAT DEASUPRA PILA
Reinforcements/Armături
Scale/Scare 1:10

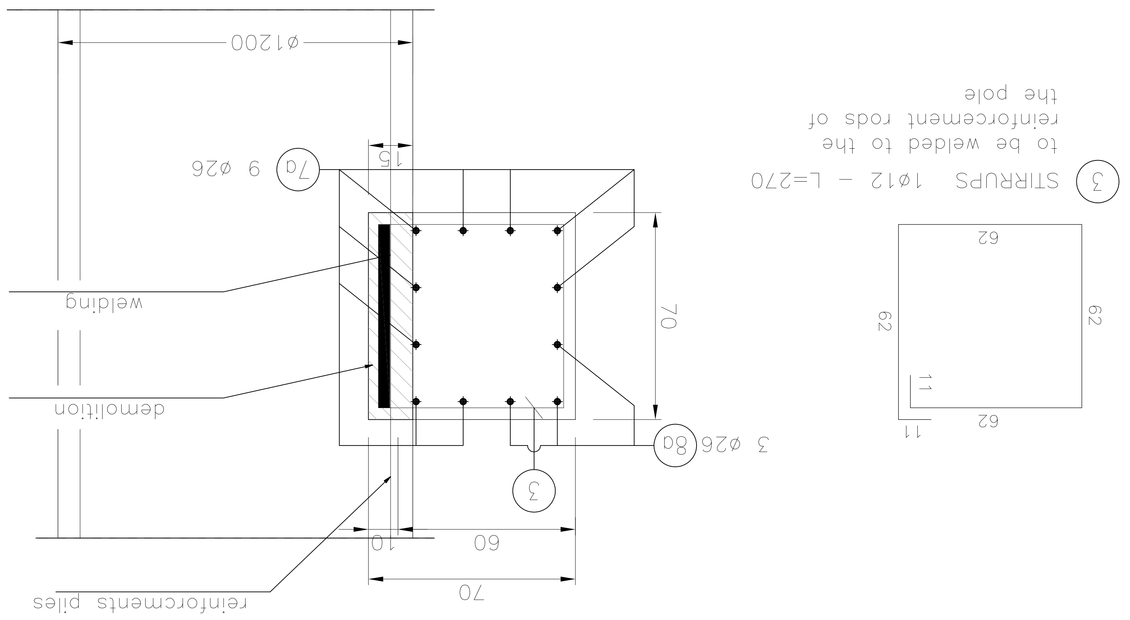

CURB REINFORCED CONCRETE
BORDURA DIN BETON ARMAT
Formworks/Cofraje
Scale/Scare 1:20

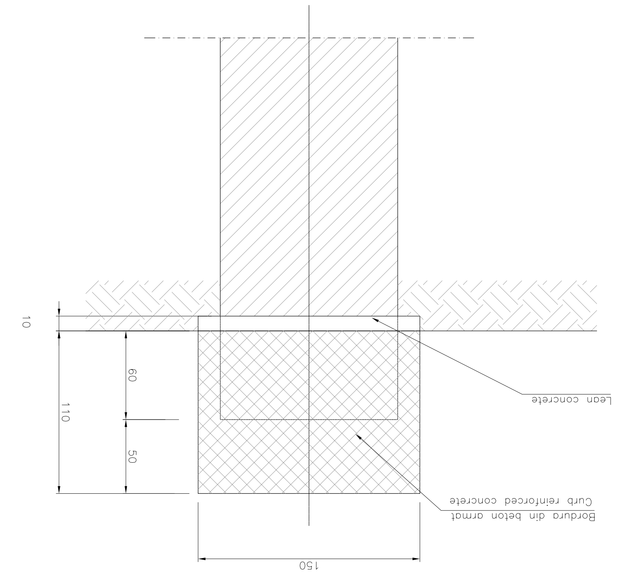

CURB REINFORCED CONCRETE -TYPICAL SECTION
BORDURA DIN BETON ARMAT- SECTIUNI TIP
Reinforcements/Armături
Scale/Scare 1:10

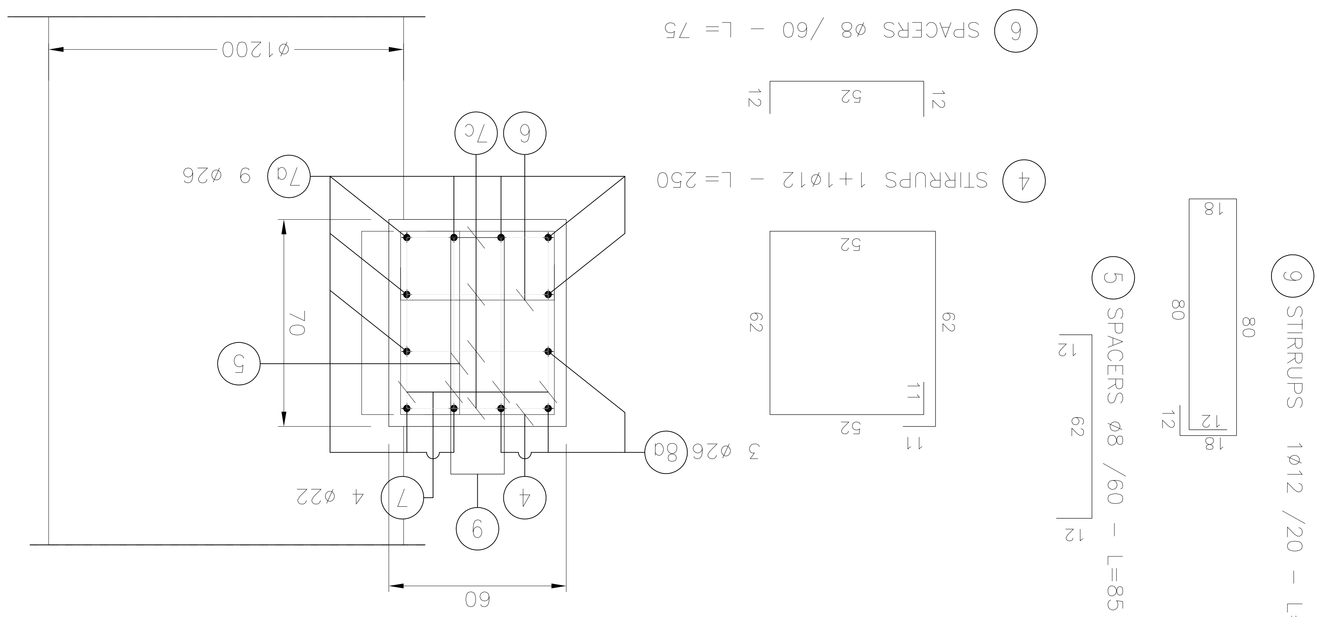

CURB REINFORCED CONCRETE WITH TENDONS-TYPE 2
BORDURA DIN BETON ARMAT CU FRÂNGHIE-TIP 2
Reinforcements/Armături
Scale/Scare 1:10

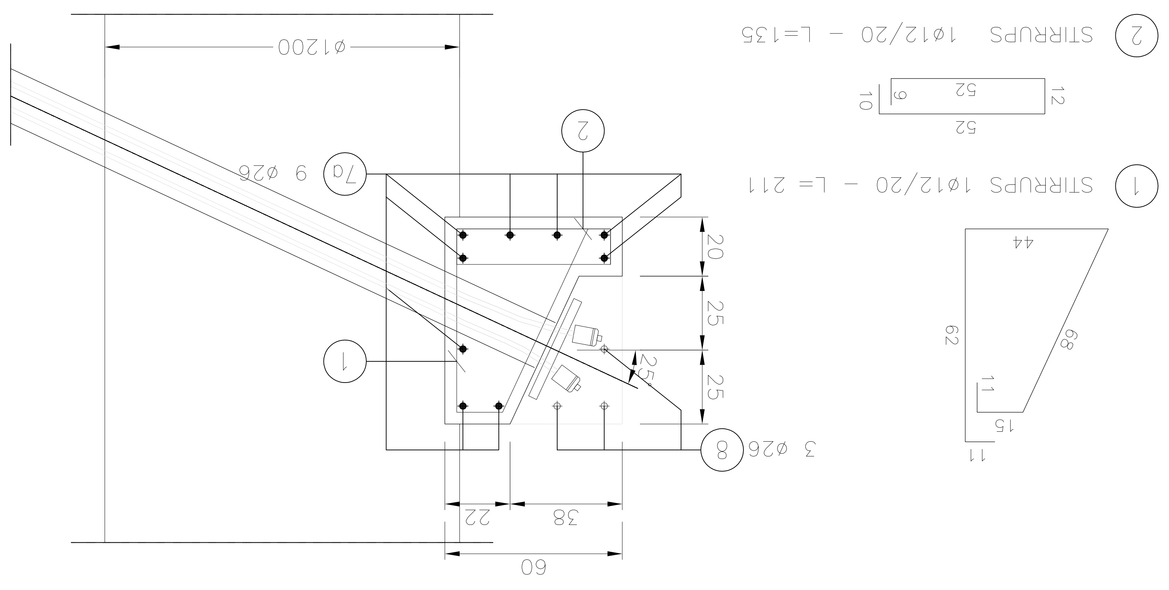

STEELS TABLE

REINFORCING STEEL:
- B450C (weldable)

Bending diameter d_{Br} :
ø Bar < ø20 -> d_{Br}=6ø
ø Bar ø20-ø26 -> d_{Br}=8ø
R se ≠ d_b/2

Legend measures:

MATERIAL TABLE

CONCRETE PILE:
- Type H2
- fck >=25 MPa
- Water/cement ratio <0,50
- Minimum structural Class S4/S5
- Cement type CEM III/V
- Class of chloride content Cl 0,20
- ø max aggregate = 22,4 mm

CONCRETE CURB:
- Type H2
- fck >=25 MPa
- Water/cement ratio <0,50
- Minimum structural Class S4/S5
- Cement type CEM III/V
- Class of chloride content Cl 0,20
- ø max aggregate = 22,4 mm

REINFORCING STEEL:
- B450C controlled by estabilizirment
- Weldable

LEAN CONCRETE:
- Type I
- fck >=12 MPa
- Cement type CEM I/V