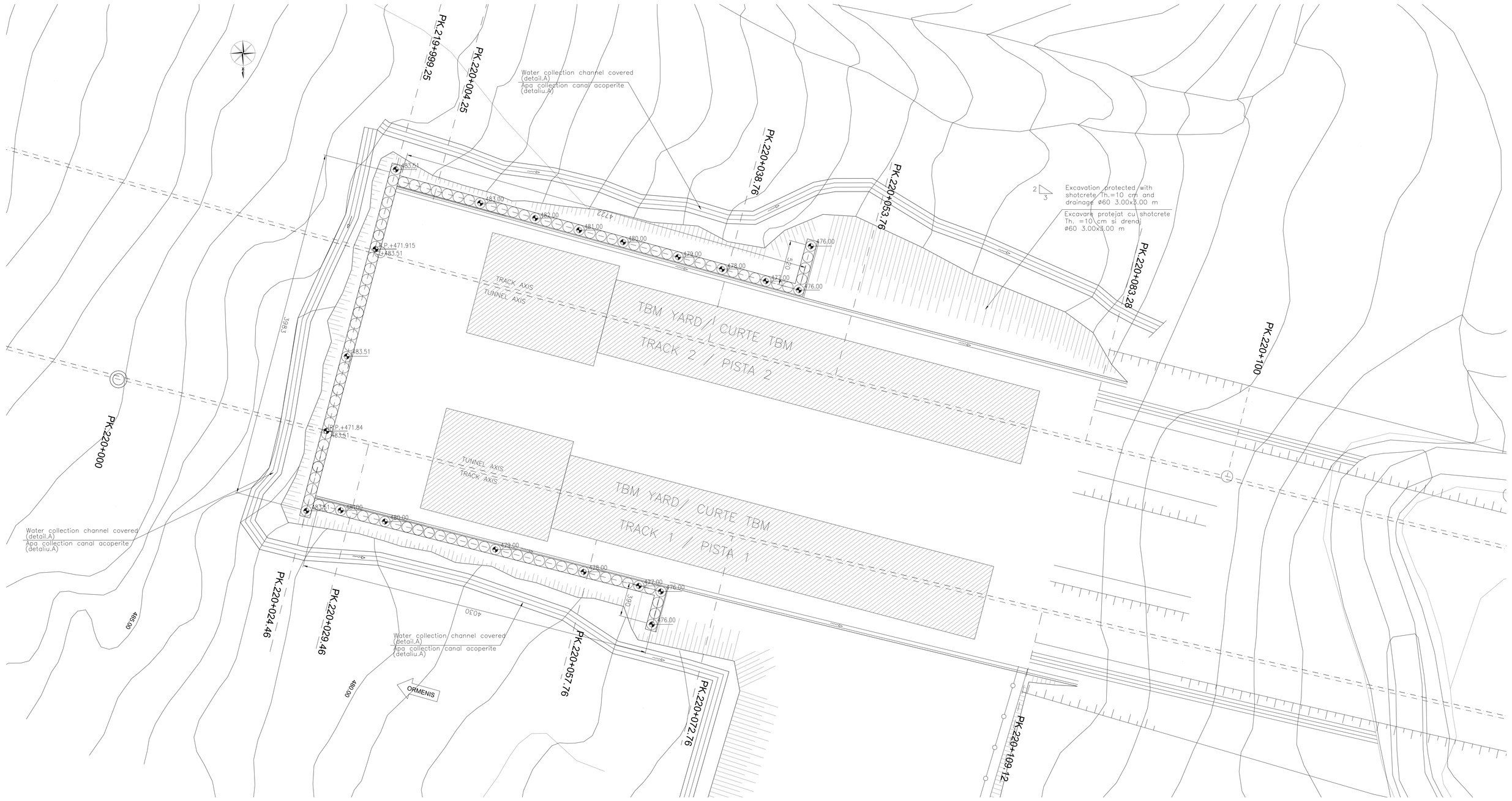

GENERAL PLAN / PLANUL GENERAL

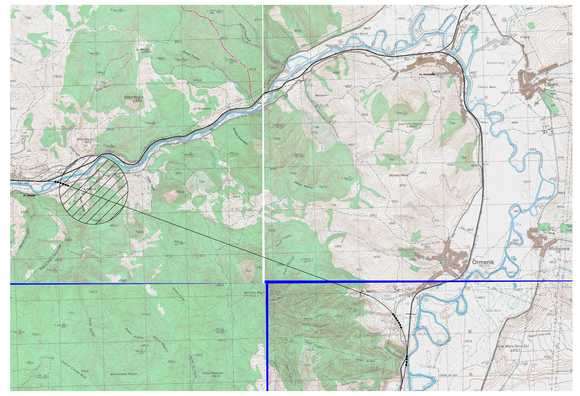

MATERIAL TABLE

TUNNEL INVERT CONCRETE:

- Type C2
- fck >=30 MPa
- Water/cement ratio <0.50
- Minimun structural Class S3/S4
- Exposure class related to environmental conditions: XA2
- Cement type CEM III/V
- Class of chloride content Cl 0.20
- ø max aggregate = 32 mm

TUNNEL CROWN CONCRETE:

- Type C1
- fck >=30 MPa
- Water/cement ratio <0.50
- Minimun structural Class S4/S5
- Exposure class related to environmental conditions: XA2
- Cement type CEM III/V
- Class of chloride content Cl 0.20
- ø max aggregate = 32 mm

REINFORCING STEEL:

- B450C controled by establishment
- Weldable

LEAN CONCRETE:

- Type I
- fck >=12 MPa
- Cement type CEM I/V

ELABORATE REFERENCE
REFERINTA ELABORATE

EA51-01-C-10-BB-GA-02-0-0-001-0
EA51-01-C-10-BB-GA-02-0-0-002-0
EA51-01-C-10-BB-GA-02-0-0-003-0
EA51-01-C-10-BB-GA-02-0-0-004-0
EA51-01-C-10-BB-GA-02-0-0-009-0

LONGITUDINAL SECTION
SECTIUNEA LONGITUDINALA
Scale/Scare 1:100

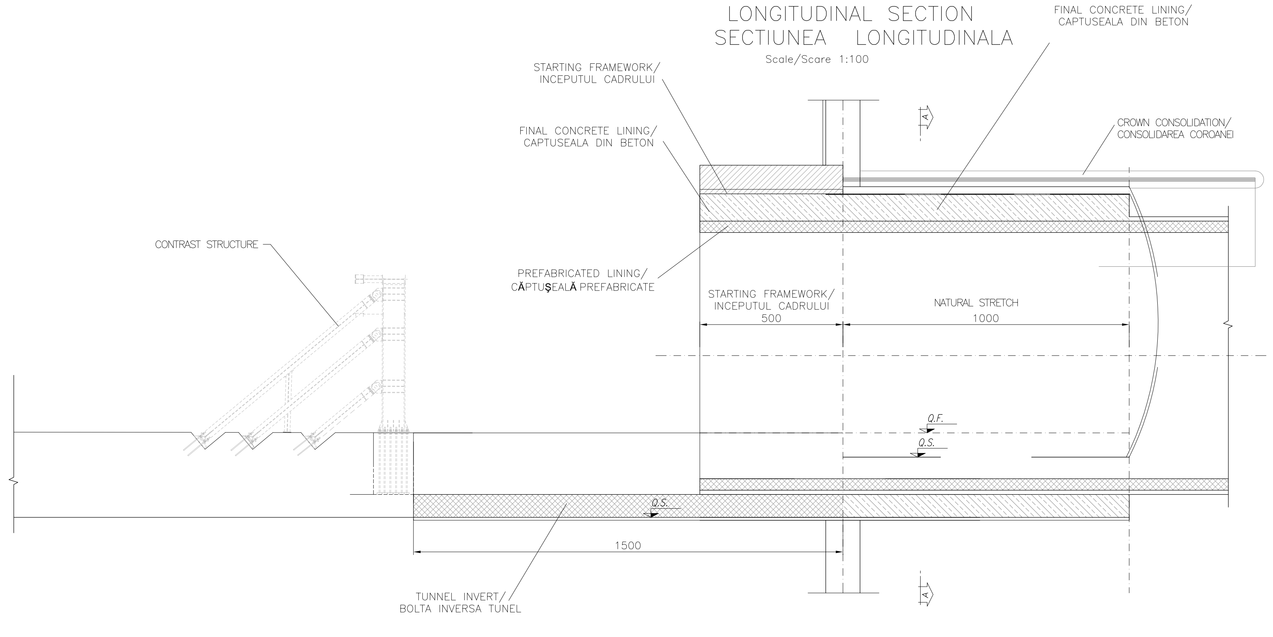

SECTION A-A
SECTIUNEA CURENTA A-A
Scale/Scara 1:100

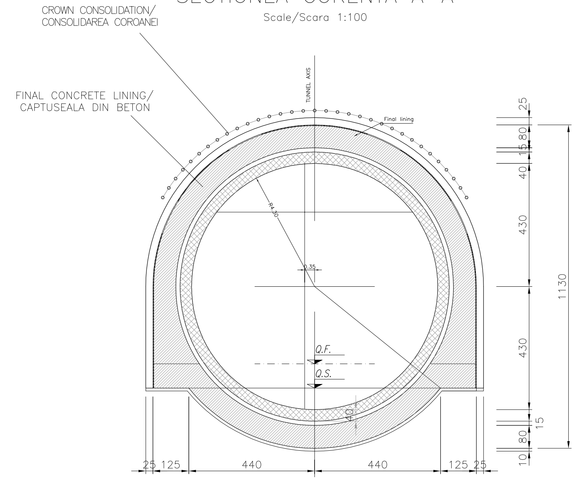

Indice Index	Data Date	Modificare Modification/Revision	Proiectant Designer	Aprobat Consultant Approved Consultant	Aprobat CFR Approved CFR
D					
C					
B					
A					

GUVERNUL ROMANIEI
ROMANIAN GOVERNMENT

PROIECT FINANŢAT DE UNIUNEA EUROPEANĂ
EUROPEAN UNION FINANCED PROJECT

CLIENT / CLIENT

C.N.C.F. "C.F.R." - S.A.

ITALFERR GRUPPO FERROVIE DELLO STATO
Joint Venture leader

Scott Wilson

OBERMEYER PLANEN + BERATEN GmbH

TECNIC Consulting Engineers

CONSULTANT / CONSULTANT

			Data Date	Semnătură Signature
Aprobat Approved	Şef proiect Project manager	R. Liuzza		
Aprobat Approved	Coordonator Secţiune 1 Section 1 Coordinator	C.Gambelli		
Verificat Checked	Tunel Expert Tunnel Expert	C. Gambelli		
Întocmit Elaborated	Proiectant Designer	C.Gambelli		

SUBCONSULTANT / SUBCONSULTANT

Aprobat Approved	Responsabil Subconsultant Subconsultant Responsible			
Întocmit Elaborated	Proiectant Designer			

Reabilitarea liniei de cale ferata Braşov - Simeria, parte componentă a coridorului IV Pan European, pentru circulaţia trenurilor cu viteza maximă de 160 km/h. Sectiune 1 Brasov - Sighisoara

Rehabilitation of the railway line Braşov - Simeria, component Part of the IV Pan-European Corridor, for the trains circulation with maximum speed of 160 km/h. Section 1 Brasov - Sighisoara

Proiect/Project
2004/RO/16/P/PA/003

Faza / Phase:
P.Th. / T.D.

Denumire desen / Drawing Title : **ORMENIS TUNNEL**
ENTRANCE RACOS SIDE
Construction work - Draw 1 of 2
Lucrări de construcţii - Desenul 1 din 2

Codificare / Codification System	Scara / Scale	LOT	Nr. / No
E A 5 1 0 1 C 1 0 P 8 G A 0 2 0 0 0 0 2 0	**variat / various**		-