D I S P O Z I T I E G E N E R A L A
GENERAL DISPOSAL

APARAT DE REAZEM TIP 12 230x450x63 - MOBIL , R max.=150t; Umax.=36 mm
BEARING TYPE 12 230x450x63 - MOBILE , R max.=150t; Umax.=36 mm

SECTIUNE A-A
SECTION A-A

VEDERE B-B
VIEW B-B

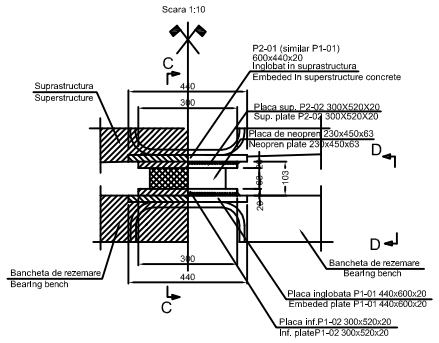

SECTIUNE C-C
SECTION C-C

VEDERE D-D
VIEW D-D

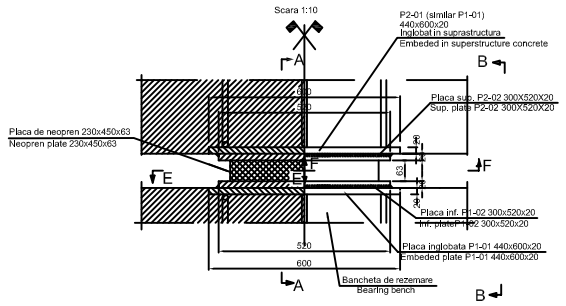

DETALII DE UZINARE PLACI METALICE
METALLIC PLATES FABRICATION DETAILS

Scara 1:10

PLACA INF. P1-02 SI P2-02 300x520x20
INF.PLATE P1-02 SI P2-02 300x520x20

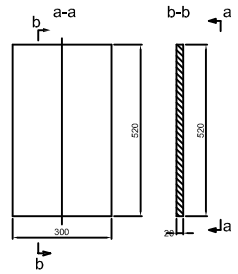

SECTIUNE E-E
SECTION E-E

SECTIUNE F-F
SECTION F-F

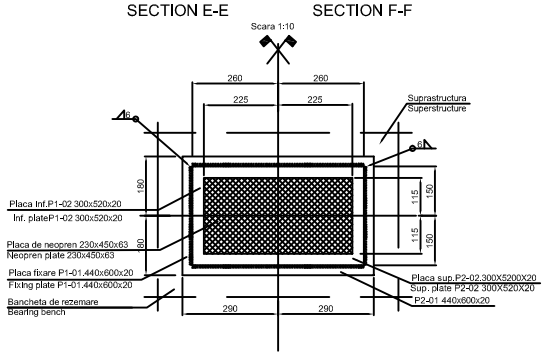

NOTA:

1. TOATE COTELE SUNT IN mm;
2. IMBINARILE INTRE PIESELE P1-01 si P1-02,
P2-01 si P2-02, SUNT REALIZATE CU SUDURA DE COLT CU GROSIMEA DE 6 mm;
3. TOATE SUPRAFETELE LIBERE ALE PIESELOR METALICE SE VOR PROTEJA CU VOPSEA ANTICOROZIVA.

NOTE:

1. ALL DIMENSIONS ARE GIVEN IN mm;
2. THE JOINTS BETWEEN PIECES P1-01 and P1-02,
P2-01 and P2-02, ARE MADE WITH CORNER WELDING 6MM THICKNESS
3. ALL METALLIC PIECES CLEAR SURFACES SHALL BE PROTECTED WITH ANTICORROSIVE PAINT.

MASURATOAREA PIESELOR METALICE PENTRU 1 APARAT DE REAZEM MOBIL TIP 12

M	DENUMIRE PIESA PIECE NAME	DIMENSIUNI (mm)	NR. BUC.	GR./BUC. (kg)	GREUTATE TOTALA (kg)
P1-O2	Placa inferioara	300x520x20	1	24,492	24,492
P2-O2	Placa superioara	300x520x20	1	24,492	24,492
TOTAL MATERIAL METALIC PT. 1 APARAT DE REAZEM MOBIL					49,00
TOTAL MATERIAL METALIC PT. INTREG PASAJUL 4aparate x 6rand x 49,00=1176,00Kg					
TOTAL APARATE REAZEM NEOPREN PT. INTREG PASAJUL					24

1 MOBILE BEARING DEVICE TYPE 12 METALLIC PIECES MEASUREMENT

M	PIECE NAME	DIMENSIONS (mm)	PIECE NO.	weight/pcs (kg)	TOTAL WEIGHT (kg)
P1-O2	Inferior plate	300x520x20	1	24,492	24,492
P2-O2	Superior plate	300x520x20	1	24,492	24,492
TOTAL METALLIC MATERIAL FOR 1 MOBILE BEARING DEVICE					49,00
TOTAL METALLIC MATERIAL FOR ENTIRE BRIDGE 4bearings x 6rows x 49,00=1176,00Kg					
TOTAL NEOPREN BEARING DEVICES FOR ENTIRE BRIDGE					24

MASURATOAREA CORDONULUI DE SUDURA

PIESE SOLIDARIZATE	L.cordon (mm)	Nr. cordon	L.totala (mm)	δcordon (mm)	Observatii
P1-01 cu P1-02	1640	1	1640	6	cordon dublu
P2-01 cu P2-02	1640	1	1640	6	cordon dublu
Lungime totala 1 cordon aparat de reazem mobil (m): 3,30m					
Lungime totala cordoane la nr. total aparate de reazem fixe 3,30x24=80,0m					

WELDING BEAD MEASUREMENT

JOINED PIECES	L.bead (mm)	Bead length	L.total (mm)	δbead (mm)	Observations:
P1-01 cu P1-02	1640	1	1640	6	double bead
P2-01 cu P2-02	1640	1	1640	6	double bead
Total length for 1 bead of mobile bearing device: 3,30m					
Total bead length for total number of fixed bearings 3.30x24=80.0m					

SECTIUNE 1-1
SECTION 1-1

PLACA DE NEOPREN 230x450x63
NEOPREN PLATE 230x450x63

Scara 1:2,5

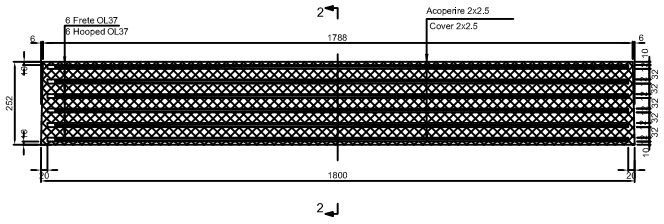

SECTIUNE 2-2
SECTION 2-2

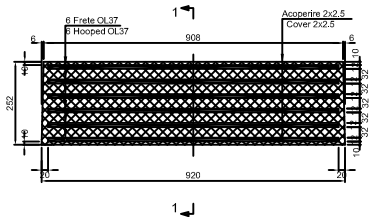

This drawing is forbidden to be copied, lent or used in other purposes than those previously approved by AREX Idder Company as its owner.
Se interzice copierea, difuzarea, imprumutarea sau utilizarea in alte scopuri, fara permisiunea AREX Idder Company ca proprietar al desenului.

Indice Index	Data Date	Modificare Modification/Revision	Proiectant Designer	Aprobat Consultant Approved Consultant	Aprobat CFR Approved CFR
D					
C					
B					
A	11.2011	Revizia 1	Ionela Ungureanu		

GUVERNUL ROMANIEI
ROMANIAN GOVERNMENT

PROIECT FINANȚAT DE UNIUNEA EURO
EUROPEAN UNION FINANCED PR

CLIENT / CLIENT

C.N.C.F. "C.F.R." - S.A.

ITALFERR GRUPPO FERROVIE DELLO STATO Joint Venture leader
Scott Wilson
OBERMEYER PLANEN + BERATEN GmbH
TECNIC Consulting Engineers

CONSULTANT / CONSULTANT

			Data Date	Semnătură Signature
Aprobat Approved	Şef proiect Project manager	R. Liuzza		
Aprobat Approved	Coordonator Secţiune 1 Section 1 Coordinator	C. Gambelli		
Verificat Checked	Expert Cheie Checking Expert	V.Kallidromitis		

SUBCONTRACTANT / SUBCONTRACTOR

Aprobat Approved	Responsabil Subconsultant Subconsultant Responsible	A. Dinulescu Stanciu	11.2011	
Întocmit Elaborated	Proiectant Designer	Ionela Ungureanu	11.2011	

Reabilitarea liniei de cale ferata Braşov - Simeria, parte componentă a coridorului IV Pan European, pentru circulaţia trenurilor cu viteza maximă de 160 km/h,
Tronsonul : Braşov - Sighişoara
Rehabilitation of the railway line Braşov - Simeria, component Part of the IV Pan-European Corridor, for the trains circulation with maximum speed of 160 km/h,
Section : Braşov - Sighişoara

Proiect/Project
2004/RO/16/P/PA/003

Faza / Phase:
P.Th. / T.D.

Denumire desen / Drawing Title :

INTERVAL APATA - RACOS
PASAJ SUPERIOR / OVER PASS - KM 208+405.181 L=105.20m
PLAN APARAT DE REAZEM MOBIL TIP 12/ PLAN TYPE MOBILE BEARING 12

Codificare / Codification System	Scara / Scale 1:10/1:2,5	LOT / LOT	Nr. / No 01 / 01
E A 5 1 0 1 E 1 0 B K P A 0 0 2 1 0 1 4			1