ARMARE PILOT CULEE - PILE REINFORCEMENT - ABUTMENTS
1.20m diametru, 20.00m lungime - 1.20m dia. 20.00m length

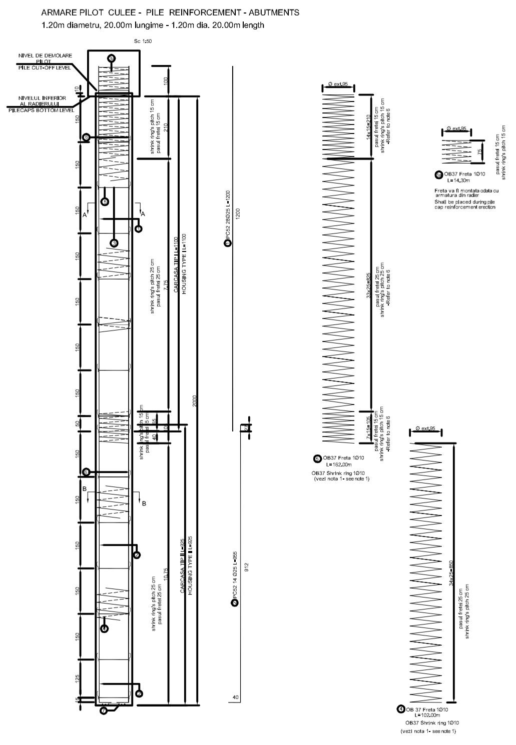

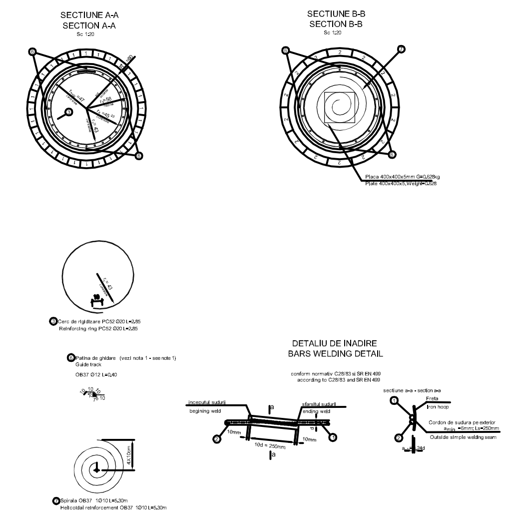

NOTE

1. Freta si cercurile de rigidizare se vor fixa prin puncte de sudura de armaturile de rezistenta ① ②
2. Patina de ghidare ⑥ se sudeaza pe ambele parti de armatura de rezistenta ① ②. Patina de ghidare ⑥ poate fi inlocuita printr-un alt dispozitiv patentat.
3. Acoperirea de beton minimum 7.5cm
4. Freta carcasei de armatura poate fi executata din tronsoane cu lungimea de 1.00m cand pasul fretei este de 15cm respectiv 2.00m cand pasul fretei este de 20-25cm. Inadirea tronsoanelor se va face prin suprapunerea barelor pe o lungime de 45 diametre conform detaliului de inadire freta.
5. Placa metalic 400x400x5 se va suda de armatura in spirale marca ⑦ situata la partea inferioara a carcasei pentru a impiedica deplasarea acesteia.

NOTES

1. The shrink ring and the reinforcing ring will be fixed with welding points by the reinforcements ① ②
2. Guide track ⑥ will be welded only at one edge to the reinforcements ① ②. Guide track ⑥ may be substituted by a proprietary guide (cover spacer unit)
3. Minimum concrete cover is 7.5 cm
4. The cage coil can be performed of 1.00m length when the coil pitch is 15cm respectively 2.00m length when the coil pitch is 20-25cm. The joining of the sections will be done by overlapping the coil bars on 45 diameters length in accordance with the coil joining detail.
5. The metallic plate will be welded at the bottom rebar cage (mark ⑦) to restrict pile rebar cage movement while placing pile concrete.

- Beton C20/25
- P_4^{10} - raport A/C=max 0.6, agregate 0-31mm
- Ciment II A S 32.5 R
- Dozaj minim - 400kg ciment/mc

- Concrete C20/25
- P_4^{10} - W/C ratio=max 0.6, aggregates 0-31mm
- Cement II A S 32.5 R
- Minimum dosage - 400kg cement/cubm

ARMATURA / REINFORCEMENT: PC52, OB37

EXTRAS DE ARMATURA PT. UN PILOT
REINFORCEMENT AMOUNT FOR ONE PILE

M	Ø	n	L (ml)	Σnl (ml)	g/ml (kg)	G (kg)	Obs.
CARCASA TIP I - HOUSING TYPE I							
1	25	28	12.00	336.00	3.853	1294.61	PC52
3	20	7	2.85	19.95	2.466	49.20	PC52
3a	10	1	14.30	14.30	0.617	8.82	OB37
5	10	1	162.00	162.00	0.617	99.95	OB37
6	12	28	0.40	11.20	0.888	9.95	OB37
TOTAL CARCASA TIP I / TOTAL HOUSING TYPE I					PC52 : 1343.81kg; OB37 : 118.72kg		
CARCASA TIP II - HOUSING TYPE II							
2	25	14	9.55	133.70	3.853	515.15	PC52
3	20	7	2.85	19.95	2.466	49.20	PC52
4	10	1	102.00	102.00	0.617	62.93	OB37
6	12	28	0.40	11.20	0.888	9.95	OB37
7	10	1	5.30	5.30	0.617	3.27	OB37
TOTAL CARCASA TIP II / TOTAL HOUSING TYPE II					PC52 : 564.35kg; OB37 : 76.15kg		
TOTAL PENTRU UN PILOT / TOTAL FOR ONE PILE					PC52 : 1908.16kg; OB37 : 195.00kg		

NUMAR TOTAL DE PILOTI: (88 +2) bucati
TOTAL NUMBER OF PILES: (88+2) pieces

PC52 : 90 x 1908.16kg=167918.00kg
OB37 : 90 x 195.00kg=17160.00kg

SE VOR EXECUTA 2 PILOTI DE PROBA
TWO 1.20m Ø TEST PILES SHALL BE CARRIED OUT

ELEMENTE CARACTERISTICE / CHARACTERISTIC ELEMENTS	Ø=1.20m
r_{ext} -raza tubaj exterior - pipe's external radius	60.00
r_{it} -raza tubaj interior - pipe's internal radius	56.00
r_a -raza dispunere armatura - reinforcement's arrangement radius	45.25
r_c -raza cerc de rigidizare - reinforcing ring radius	43.00
r_f -raza freta - shrink ring's radius	47.00

ARMARE PILOT PILA - PILE REINFORCEMENT - PIER
1.20m diametru, 20.00m lungime - 1.20m dia. 20.00m length

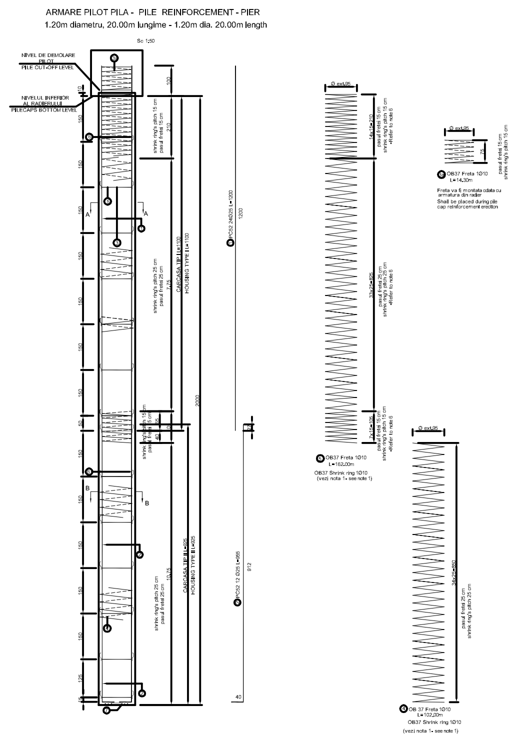

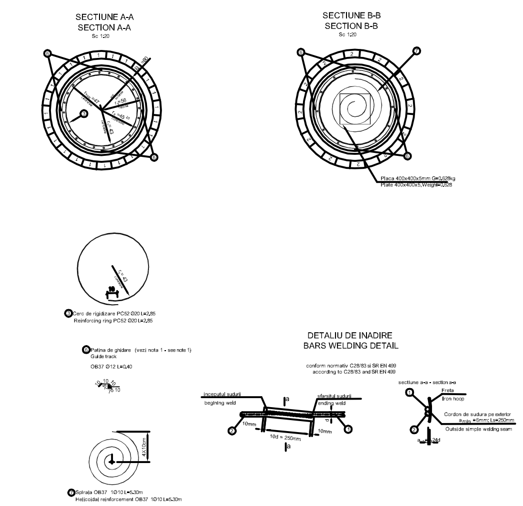

NOTE

1. Freta si cercurile de rigidizare se vor fixa prin puncte de sudura de armaturile de rezistenta ① ②
2. Patina de ghidare ⑥ se sudeaza pe ambele parti de armatura de rezistenta ① ②. Patina de ghidare ⑥ poate fi inlocuita printr-un alt dispozitiv patentat.
3. Acoperirea de beton minimum 7.5cm
4. Freta carcasei de armatura poate fi executata din tronsoane cu lungimea de 1.00m cand pasul fretei este de 15cm respectiv 2.00m cand pasul fretei este de 20-25cm. Inadirea tronsoanelor se va face prin suprapunerea barelor pe o lungime de 45 diametre conform detaliului de inadire freta.
5. Placa metalic 400x400x5 se va suda de armatura in spirale marca ⑦ situata la partea inferioara a carcasei pentru a impiedica deplasarea acesteia.

NOTES

1. The shrink ring and the reinforcing ring will be fixed with welding points by the reinforcements ① ②
2. Guide track ⑥ will be welded only at one edge to the reinforcements ① ②. Guide track ⑥ may be substituted by a proprietary guide (cover spacer unit)
3. Minimum concrete cover is 7.5 cm
4. The cage coil can be performed of 1.00m length when the coil pitch is 15cm respectively 2.00m length when the coil pitch is 20-25cm. The joining of the sections will be done by overlapping the coil bars on 45 diameters length in accordance with the coil joining detail.
5. The metallic plate will be welded at the bottom rebar cage (mark ⑦) to restrict pile rebar cage movement while placing pile concrete.

- Beton C20/25
- P_4^{10} - raport A/C=max 0.6, agregate 0-31mm
- Ciment II A S 32.5 R
- Dozaj minim - 400kg ciment/mc

- Concrete C20/25
- P_4^{10} - W/C ratio=max 0.6, aggregates 0-31mm
- Cement II A S 32.5 R
- Minimum dosage - 400kg cement/cubm

ARMATURA / REINFORCEMENT: PC52, OB37

EXTRAS DE ARMATURA PT. UN PILOT
REINFORCEMENT AMOUNT FOR ONE PILE

M	Ø	n	L (ml)	Σnl (ml)	g/ml (kg)	G (kg)	Obs.
CARCASA TIP I - HOUSING TYPE I							
1	25	24	12.00	288.00	3.853	1109.66	PC52
3	20	7	2.85	19.95	2.466	49.20	PC52
3a	10	1	14.30	14.30	0.617	8.82	OB37
5	10	1	162.00	162.00	0.617	99.95	OB37
6	12	28	0.40	11.20	0.888	9.95	OB37
TOTAL CARCASA TIP I / TOTAL HOUSING TYPE I					PC52 : 1158.86kg; OB37 : 118.72kg		
CARCASA TIP II - HOUSING TYPE II							
2	25	12	9.55	114.60	3.853	441.55	PC52
3	20	7	2.85	19.95	2.466	49.20	PC52
4	10	1	102.00	102.00	0.617	62.93	OB37
6	12	28	0.40	11.20	0.888	9.95	OB37
7	10	1	5.30	5.30	0.617	3.27	OB37
TOTAL CARCASA TIP II / TOTAL HOUSING TYPE II					PC52 :490.75kg; OB37 : 76.15kg		
TOTAL PENTRU UN PILOT / TOTAL FOR ONE PILE					PC52 : 1650.00kg; OB37 : 195.00kg		

NUMAR TOTAL DE PILOTI: (88 +2) bucati
TOTAL NUMBER OF PILES: (88+2) pieces

PC52 : 90 x 1650.00kg=148500.00kg
OB37 : 90 x 195.00kg=17160.00kg

SE VOR EXECUTA 2 PILOTI DE PROBA
TWO 1.20m Ø TEST PILES SHALL BE CARRIED OUT

ELEMENTE CARACTERISTICE / CHARACTERISTIC ELEMENTS	Ø=1.20m
r_{ext} -raza tubaj exterior - pipe's external radius	60.00
r_{it} -raza tubaj interior - pipe's internal radius	56.00
r_a -raza dispunere armatura - reinforcement's arrangement radius	45.25
r_c -raza cerc de rigidizare - reinforcing ring radius	43.00
r_f -raza freta - shrink ring's radius	47.00

Indice / Index	Data / Date	Modificare / Modification/Revision	Proiectant / Designer	Aprobat Consultant / Approved Consultant	Aprobat CFR / Approved CFR
D					
C					
B					
A					

GUVERNUL ROMANIEI / ROMANIAN GOVERNMENT — PROIECT FINANȚAT DE UNIUNEA EURO[PEANĂ] / EUROPEAN UNION FINANCED P[ROJECT]

CLIENT / CLIENT — C.N.C.F. "C.F.R." - S.A.

ITALFERR GRUPPO FERROVIE DELLO STATO, Joint Venture leader — Scott Wilson — OBERMEYER PLANEN + BERATEN GmbH — TECNIC Consulting Engineers

CONSULTANT / CONSULTANT

			Data / Date	Semnătură / Signature
Aprobat / Approved	Șef proiect / Project manager	R. Liuzza		
Aprobat / Approved	Coordonator Secțiune 1 / Section 1 Coordinator	C. Gambelli		
Verificat / Checked	Expert Cheie / Checking Expert	V.Kallidromitis		

SUBCONTRACTANT / SUBCONTRACTOR

Aprobat / Approved	Responsabil Subconsultant / Subconsultant Responsible	A. Dinulescu Stanciu	02.2012	
Întocmit / Elaborated	Proiectant / Designer	Ionela Ungureanu	02.2012	

Reabilitarea liniei de cale ferata Brașov - Simeria, parte componentă a coridorului IV Pan European, pentru circulația trenurilor cu viteza maximă de 160 km/h,
Tronsonul : Brașov - Sighișoara
Rehabilitation of the railway line Brașov - Simeria, component Part of the IV Pan-European Corridor, for the trains circulation with maximum speed of 160 km/h,
Section : Brașov - Sighișoara

Proiect/Project 2004/RO/16/P/PA/003

Faza / Phase: P.Th. / T.D.

Denumire desen / Drawing Title :

STATIA / STATION BOD
PASAJ SUPERIOR / OVER PASS - KM 182+913.85
PLAN ARMARE COLOANE / REINFORCEMENT COLUMNS PLAN

Codificare / Codification System — Scara / Scale 1:10 — LOT / LOT — Nr. / No 01 / 01

EA51 01 E 05 BC PA 00 1 1 016 0