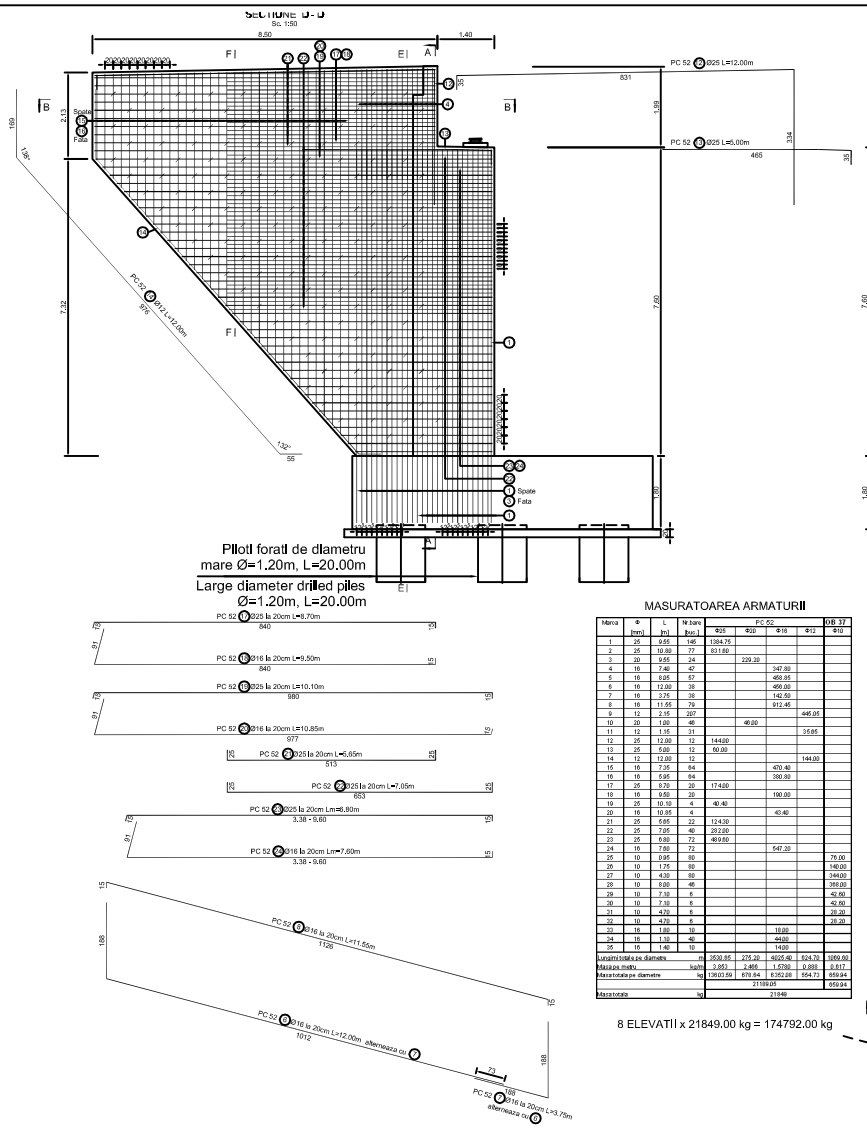

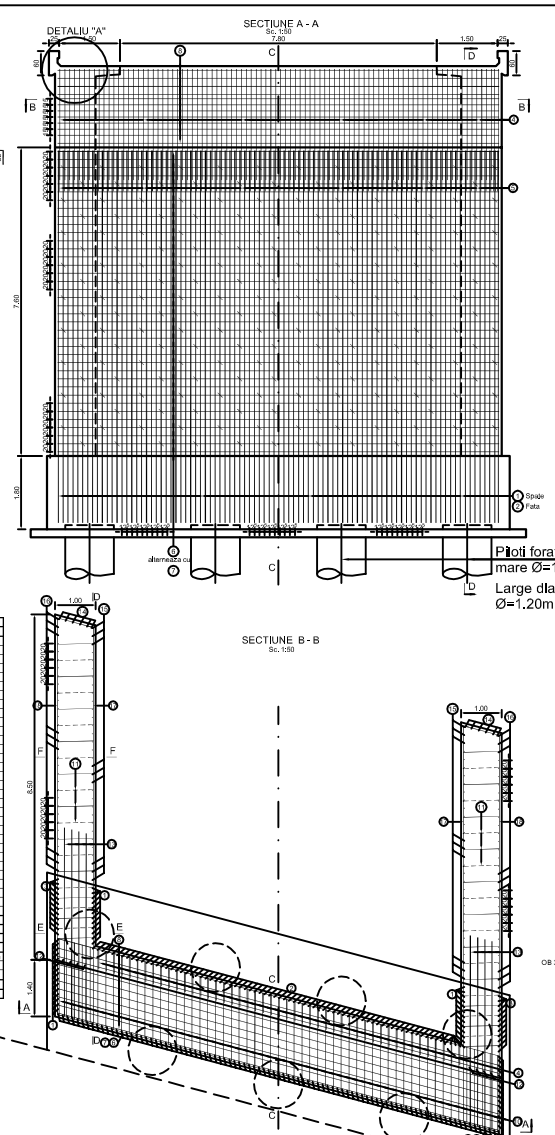

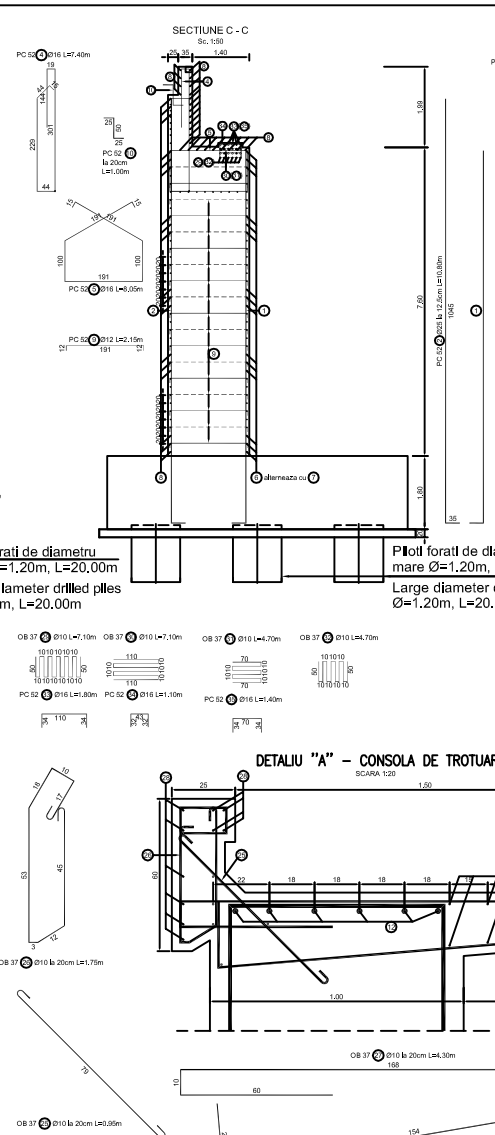

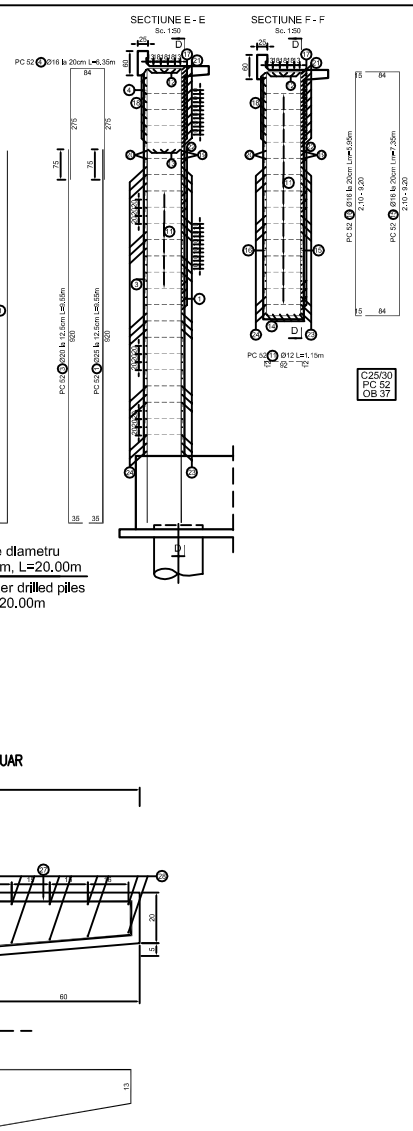

MASURATOAREA ARMATURII

Marca	Φ [mm]	L [m]	Nr bare [buc]	PC 52 Φ25	Φ22	Φ16	Φ12	OB 37 Φ10
1	25	9.85	146	1384.75				
2	25	10.88	77	511.82				
3	20	9.85	24		229.20			
4	16	7.40	47			347.82		
5	16	9.85	57			466.85		
6	16	12.08	38			459.00		
7	16	1.75	38			142.50		
8	16	11.65	76			912.48		
9	12	2.15	207				445.05	
10	20	1.00	48		48.00			
11	12	1.15	31				35.65	
12	25	12.08	12	144.00				
13	25	5.00	12	60.00				
14	12	12.08	12				144.96	
15	16	7.15	84			470.40		
16	16	5.65	84			380.80		
17	25	8.70	20	174.00				
18	16	9.50	20			190.00		
19	25	10.10	4	40.40				
20	16	10.10	4			40.40		
21	25	5.65	22	124.30				
22	25	7.95	40	318.00				
23	25	8.80	72	633.60				
24	16	7.60	72			547.20		
25	10	0.95	80					76.00
26	10	1.75	80					140.00
27	10	4.30	80					344.00
28	10	9.00	40					360.00
29	10	7.10	6					42.60
30	10	7.10	6					42.60
31	10	4.70	6					28.20
32	10	4.70	6					28.20
33	16	1.80	30			10.80		
34	16	1.30	60			46.80		
35	16	1.40	70			14.00		
Lungimea pe diametru	m			3530.85	277.20	4025.40	524.75	1080.00
Masa pe metru	kg/m			3.853	2.466	1.578	0.888	0.617
Masa totala pe diametru	kg			13603.69	683.84	6.352.08	554.73	666.84
				21180.05				666.84
Masa totala	kg			21846				

8 ELEVATII x 21849.00 kg = 174792.00 kg

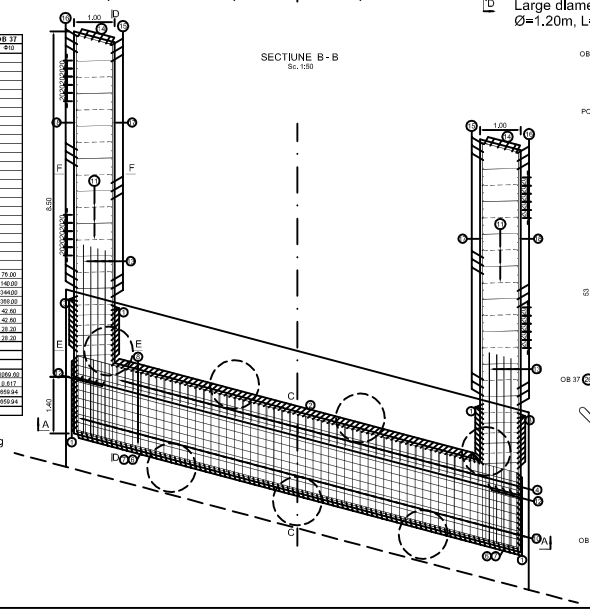

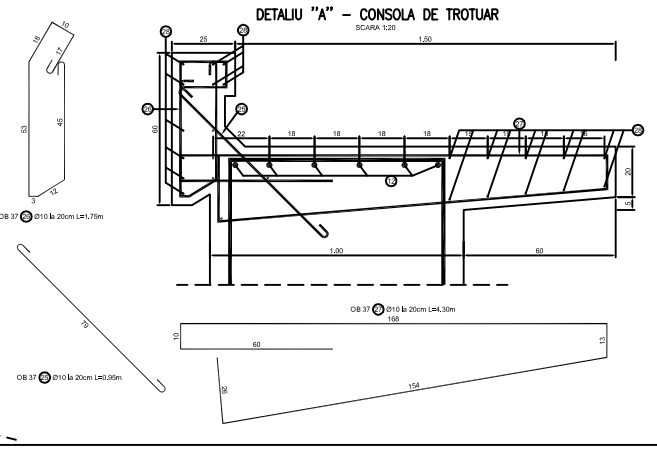

This drawing is forbidden to be copied, lent or used in other purposes than those previously approved by AREX *Lider* Company as its owner.
Se interzice copierea, difuzarea, imprumutarea sau utilizarea in alte scopuri, fara permisiunea AREX *Lider* Company ca proprietar al desenului.

Indice Index	Data Date	Modificare Modification/Revision	Proiectant Designer	Aprobat Consultant Approved Consultant	Aprobat CFR Approved CFR
D					
C					
B					
A					

GUVERNUL ROMANIEI
ROMANIAN GOVERNMENT

PROIECT FINANȚAT DE UNIUNEA EURO
EUROPEAN UNION FINANCED PR

C.N.C.F. "C.F.R." - S.A.

CLIENT / CLIENT

ITALFERR GRUPPO FERROVIE DELLO STATO *Joint Venture leader* — Scott Wilson — OBERMEYER PLANEN + BERATEN GmbH — TECNIC Consulting Engineers

CONSULTANT / CONSULTANT

			Data Date	Semnătură Signature
Aprobat Approved	Şef proiect Project manager	R. Liuzza		
Aprobat Approved	Coordonator Secţiune 1 Section 1 Coordinator	C. Gambelli		
Verificat Checked	Expert Cheie Checking Expert	V.Kallidromitis		

SUBCONTRACTANT / SUBCONTRACTOR

Aprobat Approved	Responsabil Subconsultant Subconsultant Responsible	A. Dinulescu Stanciu	11.2011	
Întocmit Elaborated	Proiectant Designer	Ionela Ungureanu	11.2011	

Reabilitarea liniei de cale ferata Braşov - Simeria, parte component ă a coridorului IV Pan European, pentru circula ţia trenurilor cu viteza maxim ă de 160 km/h,
Tronsonul : Braşov - Sighişoara
Rehabilitation of the railway line Braşov - Simeria, component Part of the IV Pan-European Corridor, for the trains circulation with maximum speed of 160 km/h,
Section : Braşov - Sighişoara

Proiect/Project 2004/RO/16/P/PA/003

Faza / Phase: P.Th. / T.D.

Denumire desen / Drawing Title :

STATIA / STATION FELDIOARA
PASAJ SUPERIOR / OVER PASS - KM 191+938.00
PLAN ARMARE ELEVATIE CULEE / ABUTMENT ELEVATION REINFORCEMENT PLAN

Codificare / Codification System	Scara / Scale 1:100	LOT / LOT	Nr. / No 01 / 01
E A 5 1 0 1 E 0 7 B C P A 0 0 4 1 0 2 0 0			