Vedere A - A
Scara 1:100

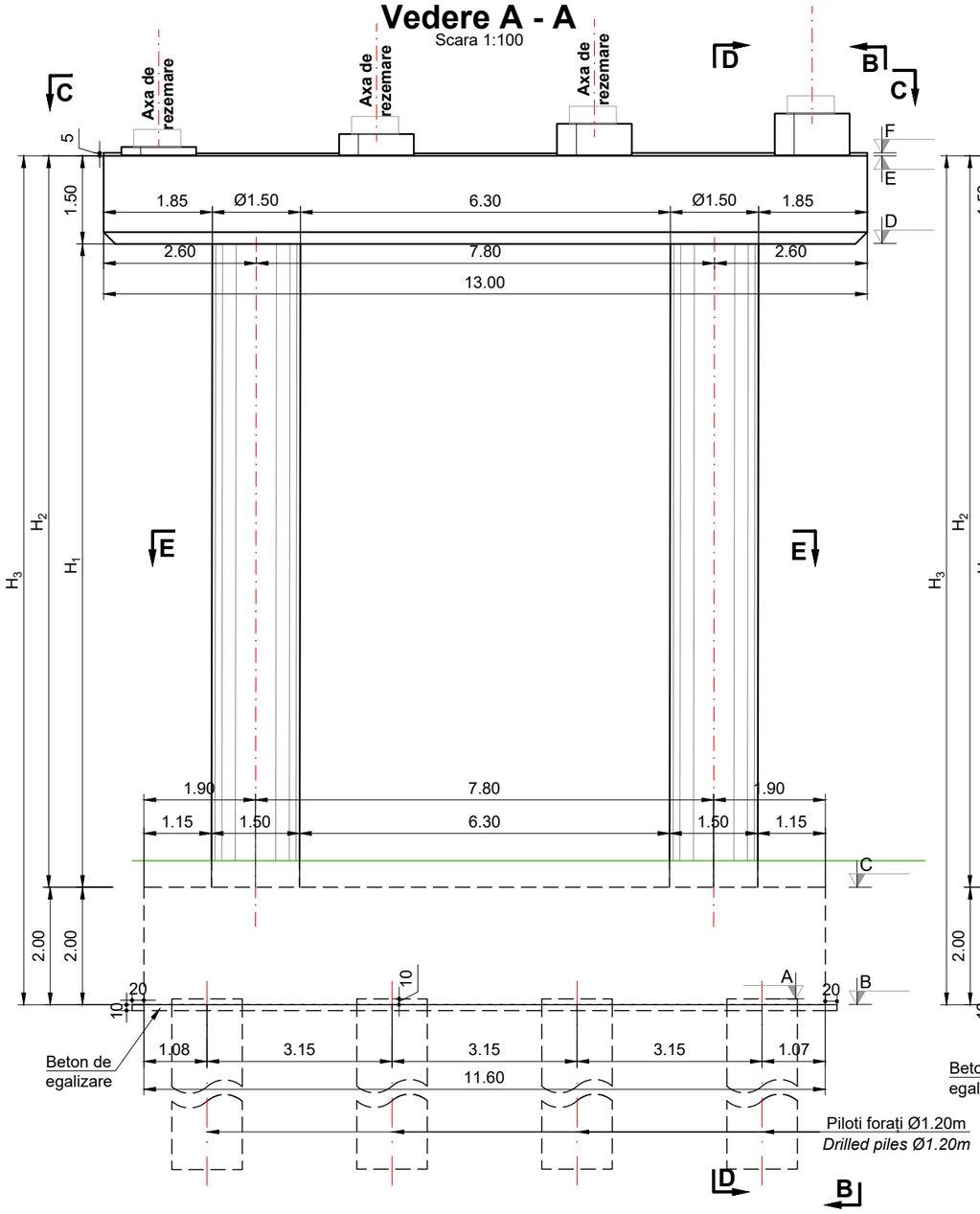

Vedere B - B
Scara 1:100

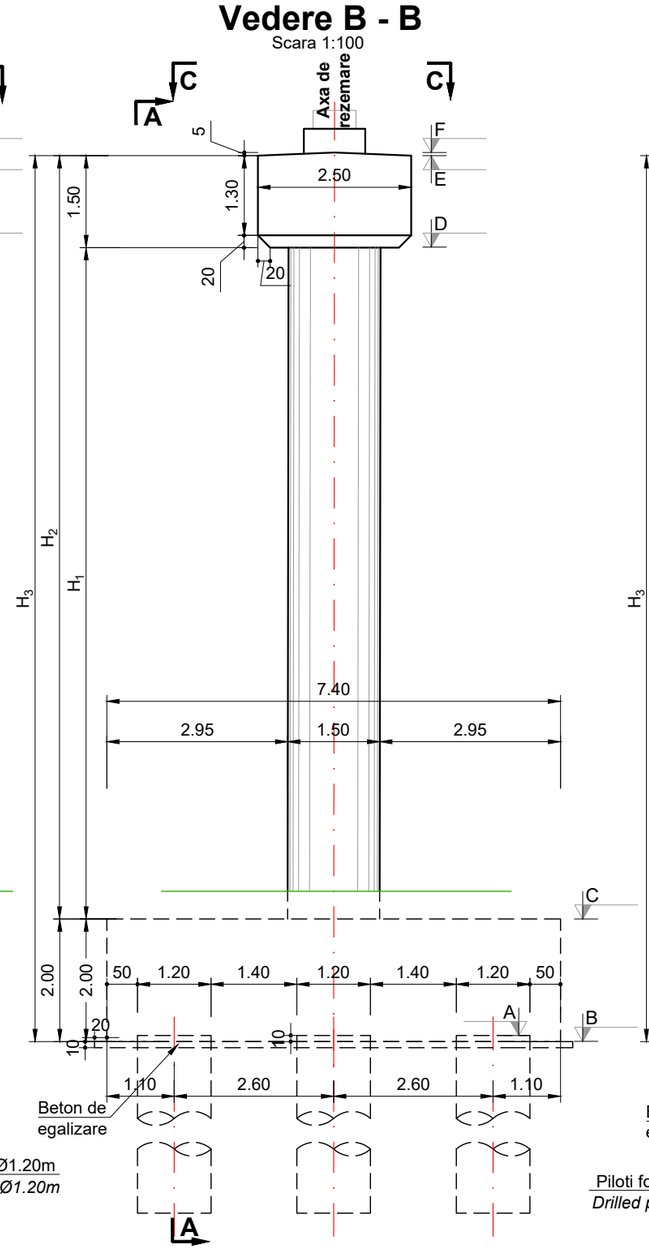

Sectiune D - D
Scara 1:100

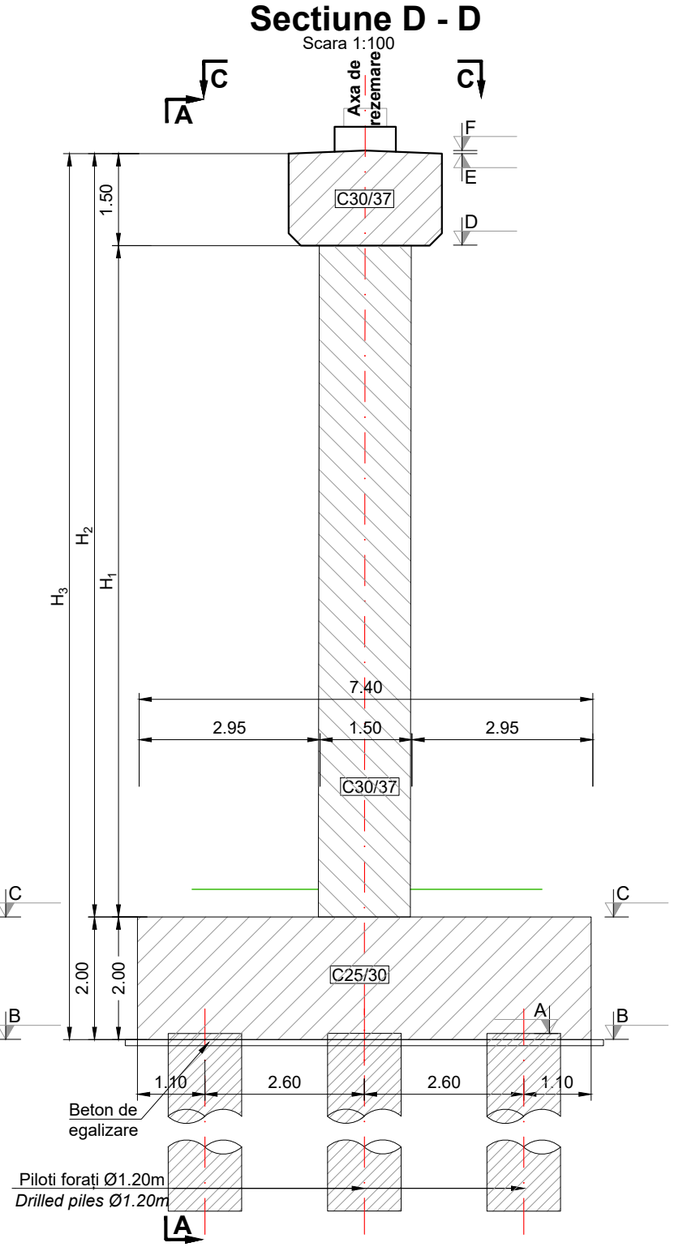

Vedere C - C
Scara 1:100

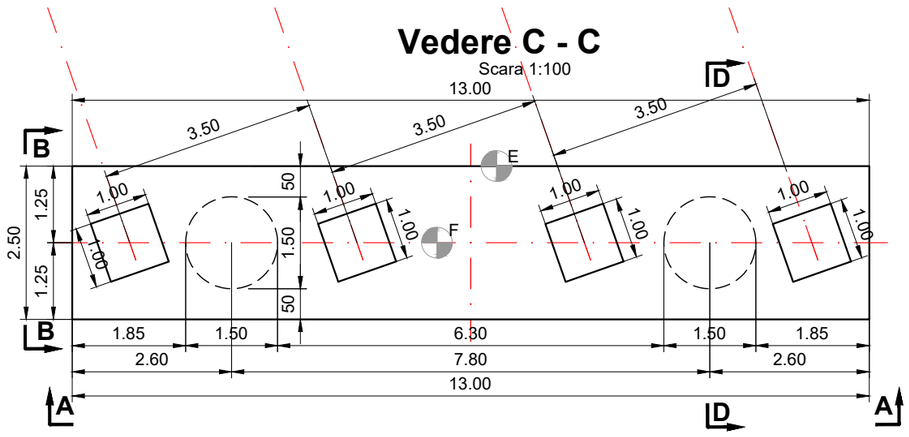

Secțiune E - E
Scara 1:100

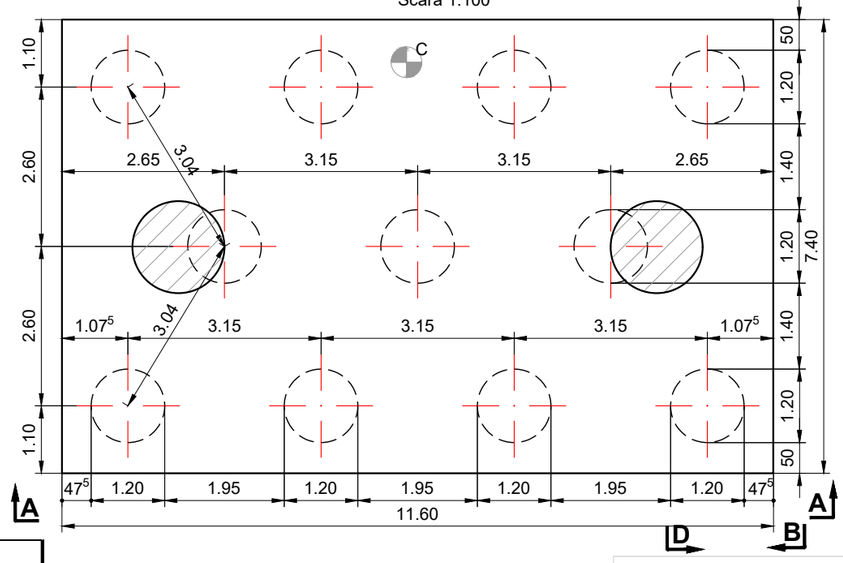

Pila	Inaltimi			Cote de nivel					
	H_1	H_2	H_3	A	B	C	D	E	F
Pila 16stg	11.45	12.95	14.95	90.41	90.31	92.31	103.76	105.26	105.31
Pila 16dr	11.95	13.45	15.45	89.51	89.41	91.41	103.36	104.86	104.91

Materiale

Beton

Element	Clasa de rezistenta	Clasa de expunere	Raport A/C	Clasa de cloruri	Dozaj ciment [kg]	D_{max} [mm]	Consistenta
Beton egalizare	C12/15	X0	-	1.00	-	32	S4
Piloti forati	C25/30	XC2	0.55	0.20	375	22.4	S3
Radiere	C25/30	XC2; XF2	0.55	0.20	300	32	S3
Elevatii	C30/37	XC4; XF4; XD1	0.45	0.20	340	32	S3

IORDĂNESCU I. CONSTANTIN
ROMANIA MLPAT
NR: 213
A1, B2, D2
INGINER VERIFICATOR PROIECTE

PROIECTANT / *DESIGNER:*
S.C. CONSITRANS S.R.L.

BENEFICIAR / *BENEFICIARY:*
MUNICIPIUL ARAD, MUNICIPIUL ORADEA, CONSILIUL JUDETEAN ARAD, CONSILIUL JUDETEAN BIHOR
CNAIR

INVESTITIA / *INVESTMENT:*
ACTUALIZARE/COMPLETARE/REVIZUIRE (S.F. + P.A.C. + P.O.E + P.T.E.) "DRUM EXPRES ARAD ORADEA"
ACTUALIZATION/COMPLETION (S.F. + P.A.C. + P.O.E + P.T.E.) "EXPRESS ROAD ARAD ORADEA"

FAZA PROIECTARE / *DESIGN STAGE:*
PROIECT TEHNIC DE EXECUTIE / *EXECUTION TECHNICAL PROJECT*

Contract /*Contract:* 14724/01.07.2021
Proiect /*Project no.:* 001/2021
Data / *Date:* *11.2023*
Scara /*Scale:* *1:100*

FUNCTIA / *POSITION:*	NUME / *NAME:*	SEMNATURA / *SIGNATURE:*
COORDONATOR DE PROIECT/ *PROJECT MANAGER*	ing. S. VEACESLAV	
SEF PROIECT SPECIALITATE / *TEAM LEADER*	ing. D. COVELTIR	
PROIECTAT / *DESIGNER:*	ing. V. URDAREANU	
VERIFICAT / *INTERNAL CHECKER:*	ing. D. COVELTIR	

Titlu plansa / *Drawing title:*
Plan cofraj pila P16
Pier formwork P16
Pod pe DX la km 71+700 peste Crisul Alb
Bridge on DX at km 71+700 over Crisul Alb river
LUCRARI DE POD / *BRIDGE WORKS*

Cod plansa / *Drawing code:*
CST-0121-PTE-0-DX- **02-P40-CPP-05-R00**

REV/ *REV.*	DATA/ *DATE:*	DETALII REVIZIE / *REVISION DETAILS:*	PROIECTAT / *DESIGNER:*
R00	*11.2023*	*PTE*	*Consitrans*

UNIUNEA EUROPEANĂ
Instrumente Structurale 2014-2020
PROIECT CO-FINANȚAT DIN FONDUL DE COEZIUNE, PRIN PROGRAMUL OPERAȚIONAL INFRASTRUCTURĂ MARE /
PROJECT CO-FINANCED FROM THE COHESION FUND,THROUGH THE LARGE INFRASTRUCTURE OPERATIONAL PROGRAM